SCHNEEBERGER
LINEAR TECHNOLOGY

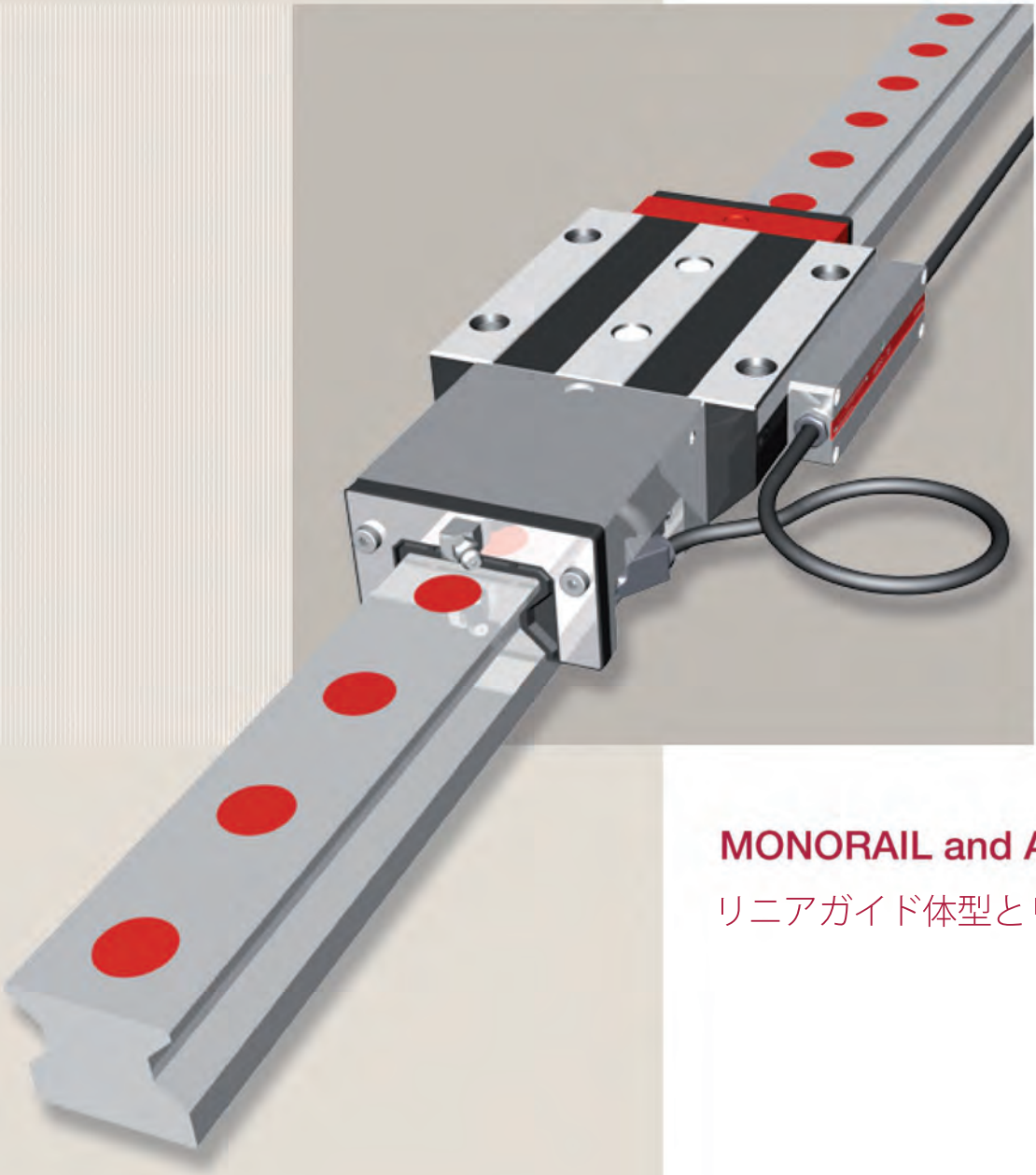

MONORAIL and AMS

リニアガイド体型とリニアエンコーダ

目次

1. 製品概要

2. 技術データ

3. ローラタイプ モノレールMR

4. ボールタイプ モノレールBM

5. ラック一体型 モノレールBZ

6. モノレールAMSA 3A　アナログインタフェースエンコーダー体型ガイドウェイ（ローラ）

7. モノレールAMSD 3A　デジタルインタフェースエンコーダー体型ガイドウェイ（ローラ）

8. モノレールAMSA 4A　アナログインターフェースエンコーダー体型ガイドウェイ（ボール）

9. モノレールAMSD 4A　デジタルインターフェースエンコーダー体型ガイドウェイ（ボール）

〒154-0002 東京都世田谷区下馬1-49-12 下馬MIYAGAWAビル
1F ロジスティック部・ショースペース／4F 営業部03-5779-7339 03-3487-6010（FAX）
Email: info-j@schneeberger.comショールーム見学のお問い合わせは、showroom@schneeberger.co.jp
http://www.schneeberger.com

MR (ローラタイプモノレール)

高剛性、最高の動・静定格荷重、スムースで真直ぐな走査、キャリッジ内の高い気密性を誇るドイツ製のローラガイドウェイです。これらの優位性が、お客様の機械に、機械の精度、加工物の精度などの大きな付加価値を与えます。加えて、振動 (マクロ的振幅とミクロ的振幅) を大幅に抑えられる構造体になっていることから、機械メーカーのエンドユーザーのツール寿命に貢献します。
創業1923年のシュネーベルガー社が世界最古のガイドメーカーとして、その経験とノウハウにもとづいた、設計力を凝縮した製品がこのローラタイプモノレールMR。シュネーベルガー社、一番の自慢の製品です。
全部品の形状、形状精度にこだわりを持ち、限りなく滑らかで摩擦の少ないシュネーベルガー社MRは近代の頂上を極めつつあるお客様の機械設計のチャレンジに、是非ご活用いただきたい製品です。

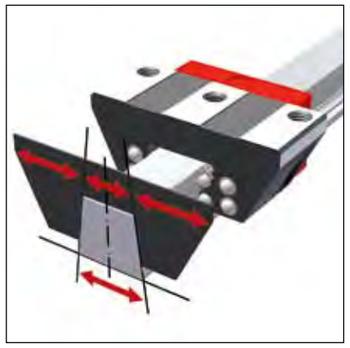

BM (ボールタイプモノレール)

シュネーベルガー社のボールタイプモノレールは、左図の通り、レールが台形形状をしています。これにより、①ボールの割には高剛性、高安定性、②キャリッジ、ワイパーなどが全てレールの中央で交換でき、メンテナンスの利便性が高い、などの利点があります。
しかしながら、ボールタイプはローラタイプに比べ、価格優先で選択されがちなのが今日の機械設計の現状です。
シュネーベルガー社ボールタイプモノレールは、ボールでありながらもローラタイプと同レベルの精度を追求しつつ全品ドイツ工場で製造しておりますことから、様々な市場において多くの固定客があるものの、残念ながら日本の市場では価格競争力に劣るのが現実です。
よって、日本シュネーベルガー社では、敢えてボールタイプモノレールBMの能動的な販売拡張活動は行っておりません。しかし、シュネーベルガー社のボールタイプモノレールにご興味があるというお客様はいつでもお問い合わせください。技術相談、見積照会などいつでも承ります。

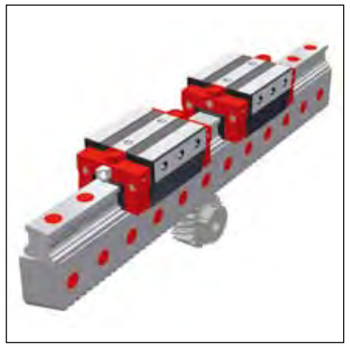

BZ

シュネーベルガーのモノレールBZは、駆動源としてのラックを一体化させた高精度リニアガイドです。高精度、高剛性では定評のあるボールタイプのプロファイル型リニアガイドがベースの製品です。超高精度ラックをガイドと一体型にすることによりもたらされる利点は、搬送やオートメーション産業、木材加工機械ならびにレーザーやウォータージェット切断機においてのコンパクト化です。マシンベッドの製造経費、ガイドウェイの取り付けや調整及びギアリングの手間を大幅に減らすことが可能です。レール側は1本モノで最長6 mまで可能です。
モノレールBZの設計は最高の操作特性、高い耐荷重性、剛性および長寿命を提供します。
ガイドと駆動源のコンパクト化、精度向上を目指すお客様に適する洗練されたソリューションです。

AMSA 3A

モノレールAMSA 3Aは、アナログ電圧インターフェースの位置検出器 (エンコーダ) 一体型のローラタイプ・プロファイル型リニアガイドです。レール側の磁気抵抗素子によるスケール、キャリッジ側の読み取りヘッド全てを自社内で開発・設計・製造しております。1990年初頭の市場発表以来、市場からの絶大な支持を受け、今日工作機械用ガイドの一標準になりました。
レール上の磁気スケールが機械本体と同じ膨張係数を持つこと、加工域に近い場所での位置検出が可能なこと、スケールとガイドの平行度調整などの追加工程が一切省けること、スケール用のスペース、及びエア・パージが不要なことなど、工作機械上での様々なメリットにあふれる製品です。
AMSA 3Aはすべての標準的な制御システムへの接続のために、1 Vppのアナログ電圧インターフェースを有しています。

AMSD 3A

モノレールAMSD 3Aは、上記AMSA 3Aを基にしつつデジタルインターフェースを有する位置検出器 (エンコーダ) 一体型のローラタイプ・プロファイル型リニアガイドです。レール上のスケールはAMSA 3AとAMSD 3Aでは同一で互換性があります。AMSD 3Aはお客様のアプリケーションに合わせデジタルインターフェースと異なる分解能を可能にするさまざまな読取ヘッドのオプションがありますので、異なる入力周波数をもつ制御システムに採用可能です。

AMSA 4A

モノレールAMSA 4Aは、アナログ電圧インターフェースの位置検出器 (エンコーダ) 一体型のボールタイプのプロファイル型リニアガイドです。
ガイドがボールタイプという違いのみで、製品特性はAMSA 3Aと同様です。

AMSD 4A

モノレールAMSD 4Aは、デジタルインターフェースを有する位置検出器 (エンコーダ) 一体型のボールタイプのプロファイル型リニアガイドです。AMSD 4Aはお客様のアプリケーションに合わせデジタルインターフェースと異なる分解能を可能にするさまざまな読取ヘッドのオプションがありますので、異なる入力周波数をもつ制御システムに採用可能です。

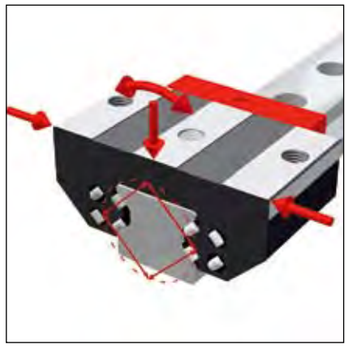

O型配置構造

循環ユニット（キャリッジ）内にO型配置された摺動面に囲まれた内部スペースは、ガイドウェイとして最も優れたパフォーマンスを生み出します。90度オフセットされたローラートラックと連動して、ヨーイング、ローリング、ピッチング、またその複合荷重などのあらゆる方向からの力を安定して、効率よく吸収し、高いモーメント剛性を提供します。

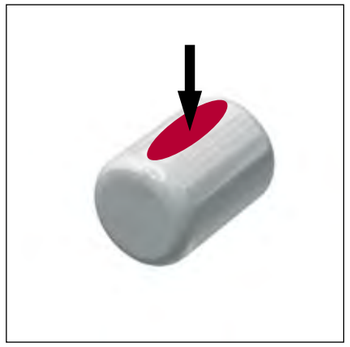

シュネーベルガー社のローラー

シュネーベルガー社のローラ側面の形状を「対数型プロファイル」と呼んでいます。
いわゆる「樽型」と呼ばれる側面の曲線は、様々な工夫が凝らされており当社ローラガイドの最大のノウハウが活かされている場所でもあります。
ボール式ガイドに比べて、ローラー式ガイドは線接触のため、許容荷重ははるかに大きくなります。樽形の形状が、接触面へかかる様々な荷重を相殺し、機械上で起こり得る複合的な荷重下においてもレール側への負荷を均一化するよう工夫されております。またローラが負荷領域と非負荷領域を行き来する際にも、いわゆる「息つき」のない円滑な走査をもたらします。

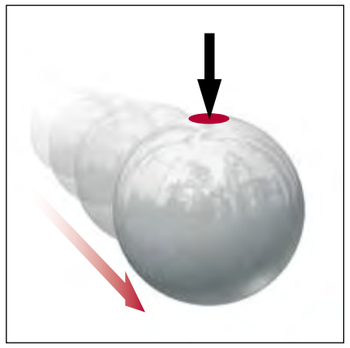

ボール型モノレールは常に2点接触

モノレールBMはO配置構造をもつ、4条ボールガイドです。予圧と動荷重下であっても、負荷領域にある1つのボールは向かい合うの2つの点のみで、レール側摺動面とキャリッジに接触しています。
4点接触のボールガイドと比べ、摺動面とボールがより高精度で向き合うため、ボールガイドであれ許容荷重が飛躍的に高くなります。ディファレンシャルスリップ（ボール上の円弧コンタクトにより2種類の周速が生じる現象）を限りなく防ぐことにより、摩擦が最少化され、なめらかな走行を実現します。

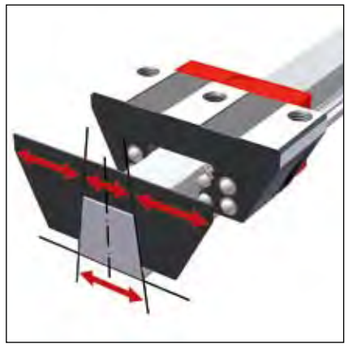

台形状のレールがもたらす利点

レール断面形状を台形にすることにより、キャリッジ形状の最適化を図るだけでなくレールの取付面を増やし剛性アップが可能になりました。また副産物として、ワイパーやキャリッジをレール端部へ移動させることなく、（レール中央でも）交換できる為、メンテ性のアップにもつながっています。

シングルレールは6 m

シュネーベルガーは全製品について、1ピース最長6 mまでのガイドレールを用意しております。これにより、大型機や長軸の搬送ラインにおいてレールのジョイント数を減らすことが可能です。組み立て作業が簡単になるだけでなく、精度と寿命が向上します。

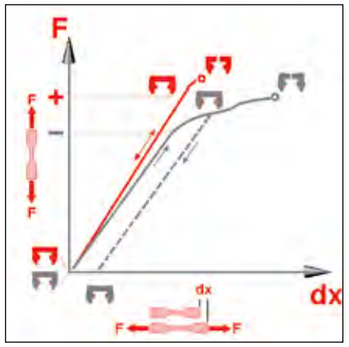

シュネーベルガーは全て総焼入キャリッジ

機械の安定した精度をと長寿命を左右する重要な部品が、モノレールのキャリッジです。機械上の過酷な汚染環境と時には予測を超える荷重のもとでも、全製品寿命期間を通じてキャリッジの塑性変形を生じさせないよう、シュネーベルガーは高品質のベアリング鋼を用い、全てのキャリッジを総焼入れしています。

シュネーベルガー社キャリッジは、全て6つの取付穴

キャリッジの、殊にひっぱり荷重下での剛性は取付機構に大きく左右されます。最高の剛性を達成するために、シュネーベルガーの全キャリッジは6つの取付穴を持っています。

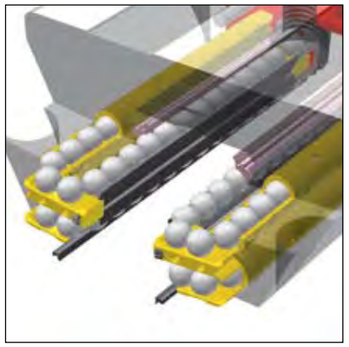

ユニークな循環経路

ローラーが非荷重領域と荷重領域を行き来する循環経路の形状にも特別のノウハウが活かされています。この部位の幾何学曲線はシュネーベルガー社のガイドウェイのコアノウハウ。低速、高速のいずれにおいても「息つき」のない円滑な操作性、最小限の脈動を実現しています。

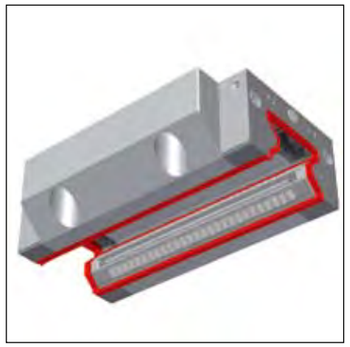

シュネーベルガー社のキャリッジは全面シール

全キャリッジは標準で、2重リップルクロスワイパーと２重リップル長手方向ワイパーの両方を、上部および底部にも装備しています。さらに標準フロントプレートがキャリッジのスチール本体部に施されており、転動体の摺動トラックの気密性を格段に向上させています。機械上で起こりうる様々な汚染物の浸入を防止し、潤滑剤の損失も最小限にします。結果、キャリッジの長耐用年数が期待できます。また、レールの上面をいかにスムースに保つかも、ワイパーおよびキャリッジの寿命を大きく左右します。シュネーベルガーはレール取付穴を完全に平らに塞ぐためのさまざまなソリューションを用意しています。

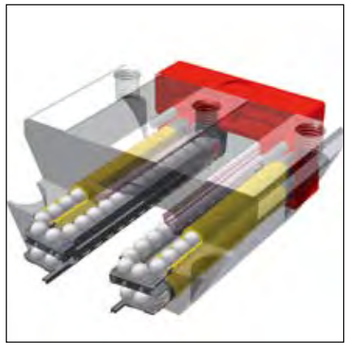

複合素材により循環トラック

転動体の循環経路はキャリッジの走行性能に大きな影響を与えます。このため、シュネーベルガー社のキャリッジは全製品の循環経路に最適化された複合素材を採用しています。この複合素材はノイズの低減のみならず潤滑剤貯蔵庫としても使われます。これによりキャリッジの寿命を大きく延ばすことが可能です。

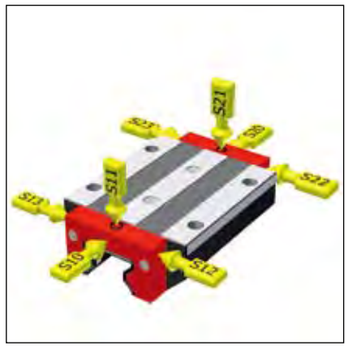

様々な給油口オプション

キャリッジは、左図のように多様な給油口選択ができるようになっています。お客様の機械設計に合わせてお選びください。また特殊な取り付け位置への潤滑油が必要なところでは、キャリッジの上面または両側から独立して潤滑剤を供給することも可能です。

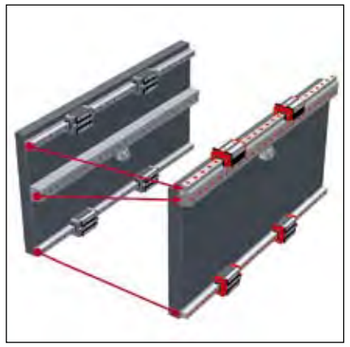

ラック一体型モノレール

長軸になればなるほど、ラックの利点が発揮されます。
シュネーベルガー社は高性能ラック＆ピニオンをガイドレールと一体化しました。シングルピースで6 mまで可能なラック一体型レールをつなぎ合わせれば高精度の駆動軸の完成です。一体化構造はラックを単独で設置する従来の方式と比べ、製造・組み立て工程および物流の費用を削減し、大きなコスト節減をもたらします。また精度が必要な取付面3セット必要な従来構造に対し、2セットで済むことも利点です。ガイドとラックの間の手間のかかる調整作業はもはや必要なく、スペースも削減することが可能です。

位置検出器（リニアエンコーダ）一体型モノレールAMS

高精度のリニアエンコーダーとモノレールを一体化することにより、お客様の機械上に洗練されたフルクローズド・フィードバックが実現します。機械の精度、加工物の形状・寸法精度を向上するフルクローズド・フィードバックが、ガイドを2本取り付けるだけで、簡単に実現してしまうのです。
主なCNC製品との互換性がとれております。
磁気抵抗素子スケールのため、グラススケールなどと比較し環境に神経を使う必要もありません。

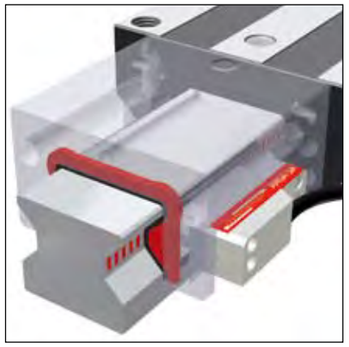

磁気抵抗素子による位置検出の原理

センサーは自社開発による磁気抵抗性のある計測原理に基づいて作られています。センサーとスケールの間に相対的な動きが生じると、磁界の変化が測定可能な電気抵抗の変化に変換されます。温度、環境磁場、電磁ノイズ、経年劣化によるあらゆる障害は独自のブリッジ回路により影響を最低限に抑えるよう設計されています。検知ヘッドは連続的に作動し、センサー機能はいかなる外因の影響も受けません。
読み取りヘッドを保護するためのワイパー付ハウジングが、読み取りヘッド位置決めの役割も兼ねていますので、消耗品である読み取りヘッドは、機械メーカーまたはそのエンドユーザがネジ2本で簡易に交換することが可能です。

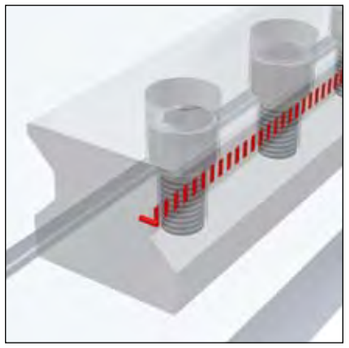

加工場所に近い場所での位置検出

通常の外付けフィードバックスケールは、機械上の加工点とは離れた位置に取り付けられています。これに対し、シュネーベルガー社のAMSは、加工点のすぐそばで位置検出が可能です。
加工中に起こる機械ベッドの熱変位はすばやくスケールに伝導し、スケールは同じ膨張係数で伸縮します。これにより、常に安定した加工精度、形状精度を保つことが可能になるのです。

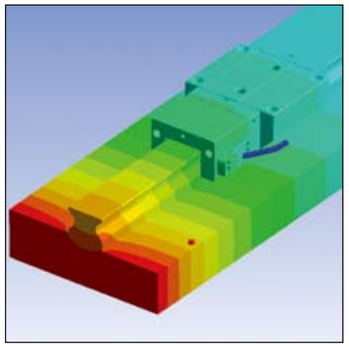

スチールと同じ熱膨張

レール部の溝に磁気スケールが格納されています。ノウハウが活かされた特殊強磁性材料を使用しているため、熱によるスケールの長手方向の膨張が鋼製の機械ベッドの膨張と同一になります。スケールの原点（リファレンスポイント）はスケールの任意の位置に刻むことが可能です。スケールの膨張率はベースのガイドレールと全く同一になるように設計されておりますので殊に金属部品を加工する場合も温度補正は不要です。

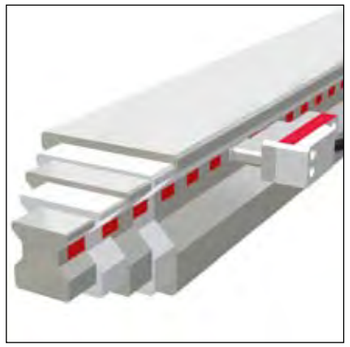

あらゆるサイズに1つの読取ヘッド

磁気スケールは異なるサイズのレールでも同じ位置に埋め込まれていますので、読み取りヘッドは一種類しかありません。1つの読取ヘッドで全サイズに互換性がありますのでお客様または機械エンドユーザーの在庫の数と管理の手間を省きます。スケールはレール内の溝にレーザー溶接で格納されていますので、半永久的に使用できます。

（ただし、潤滑油切れなどで摺動面にフレッチングが起こるなどスケールの性能に関与しない事故が起こった場合はこの限りではありません。また、先端が磁化した工具でスケールを触るとその部分のみスケールが消えてしまう場合があります。）

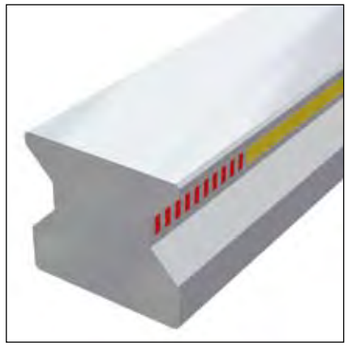

スケールの保護

磁気スケールは非常に硬い非磁性体のカバーバンドによってレーザー溶接でレール内に格納されています。これによりスケールは機械的損傷、磁気の干渉、ホットチップ、クーラントオイルなどの過酷な汚染から常に保護されています。スケール付レールは、摺動面のフレッチングなどが起こらない限り半永久的に使用できます。

完全な軸セットの供給

納入方法はお客様のご都合に合わせて選択が可能です。

お客様に選択いただく技術オプション

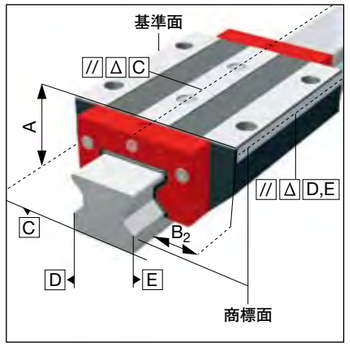

精度の等級

精度の4つの等級によって、お客様は用途に合致したレールとキャリッジを選択し、求めるものを設計することが可能です。精度の等級によりレールの走行精度とキャリッジの寸法公差が決まります。

G0 超高精度
G1 高精度
G2 良精度
G3 標準度

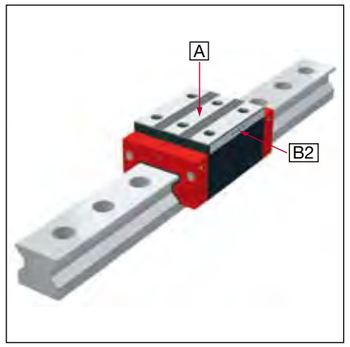

寸法公差

モノレールキャリッジとレールはそれぞれ独立に製造されますが、両者とも精度クラスごとの公差は非常に小さく、完全な互換性を持っています。したがって、どんなキャリッジも同じサイズのいかなるレールにも予圧の影響なしに交換可能です。予圧は転動体の寸法によって設定しています。レール上のキャリッジ間の寸法差に対しては、次表の欄1の値を適用することが可能です。

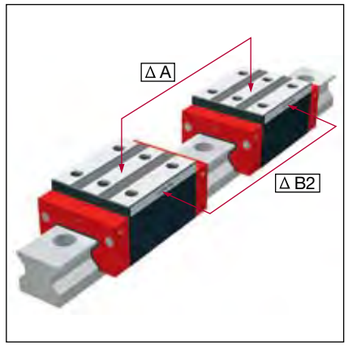

精度の等級	キャリッジおよび レール間の公差	同一レール上の 複数のキャリッジ間の 最大寸法差	複数のレールの間にある キャリッジの最大寸法 差、基準／適合	
	A/B_2	$\Delta A/\Delta B_2$	ΔA Standard	ΔA Mached
G0	±5μm	3μm	10μm	5μm
G1	±10μm	5μm	20μm	7μm
G2	±20μm	7μm	40μm	10μm
G3	±30μm	25μm	60μm	25μm
	レールの任意の位置かつ キャリッジの中央で測定	レールの同じ位置かつ キャリッジの中央で測定	レールの同じ位置かつ キャリッジの中央で測定。 注文情報：発注時に ーGPと指示	

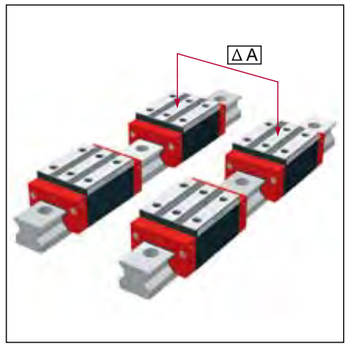

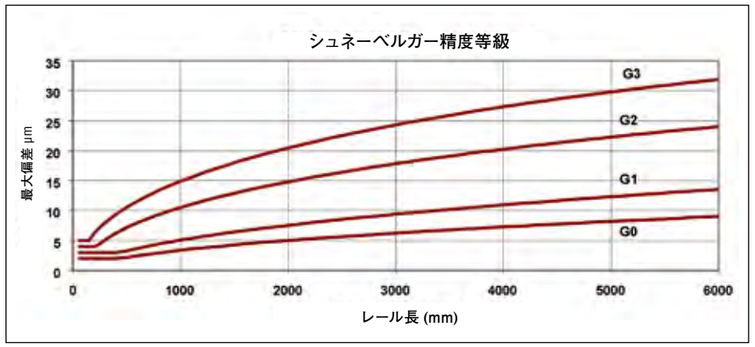

走行精度

キャリッジの走行精度は許容範囲内でリニア型かウェーブ型のどちらかになります。最大許容偏差はレールの精度等級によって決まります。実際の許容値は上表からレール長と精度等級で決まります。例えば、L3=2000 mmで精度等級がG2の場合は許容値は0.015 mmとなります。

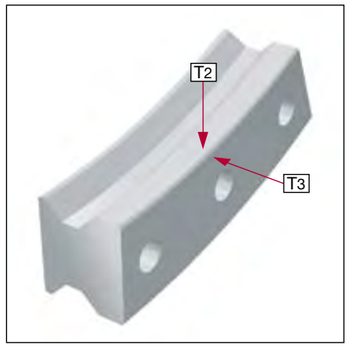

真直度

プロファイル型リニアガイドを正しく取り付けるためには、レールの長手方向の真直度と曲率を知っておく必要があります。レールは、標準タイプは高周波焼入れで柔軟性のある部品ですので、それ自身の重量で長手方向に変形する場合があります。変形は製造過程でも起こる場合があります。お客様の要求条件を満たすため、レールの真直度はカスタマイズも可能です。シュネーベルガーは、レール真直度の標準公差に加えて、お客様の個別のご要求に応じて特別の公差またはある一定の形状のレールを選択し、検査レポートを同梱の上納品することも可能です。

KC 標準

予圧等級

モノレールは様々な負荷条件下で精度・剛性を維持できるよう予圧をかけられています。一般に、予圧はガイドウェイの剛性を高めますが、一方で寿命を短縮させ、摩擦を増加させます。個別の用途の要求に応じるため、シュネーベルガーは多様な予圧等級のガイドウェイを用意しています。予圧の等級はそれぞれのサイズの動定格荷重によって決まります。

V0 超低
V1 低
V2 中
V3 高

予圧等級			
V0	V1	V2	V3
予圧			
0 - 0.02 x C_{100}	0.03 x C_{100}	0.08 x C_{100}	0.13 x C_{100}
操作条件			
一定負荷、 最小振動に 対する超低摩擦 ガイドウェイ	一定負荷、 微小振動に対する 低摩擦ガイドウェイ	高剛性、中位で 変動する負荷と振動	最高剛性、高インパクト／ ショックの負荷と振動、 大きく変動しかつ 高い負荷とトルク
特性			

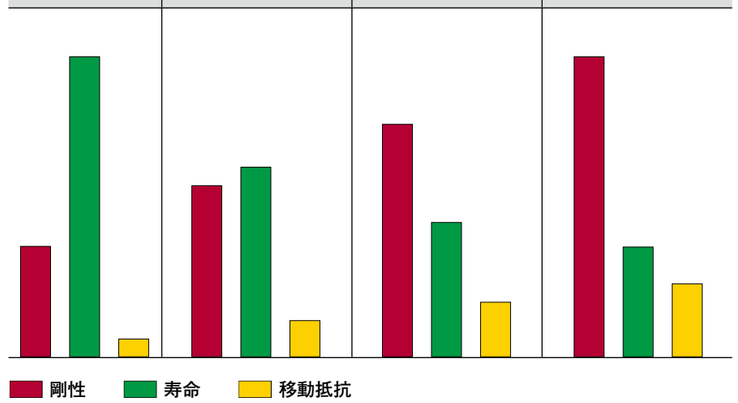

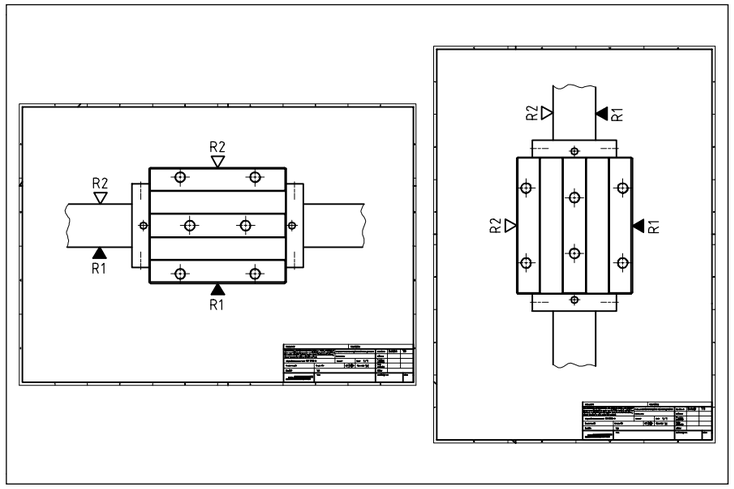

基準面

注文時には、製品の取り付け条件によって決まるキャリッジとレールの基準面（取り付け面）を指定していただく必要があります。これにもとづいて製品図面を作成します。R1は下または右を、R2は上または右を意味します。

R1 基準面を底部に
R2 基準面を上部に

コーティング

クリーンルームや真空用途での使用、湿度の高い場所での使用、表面の摩耗抵抗が必要な場合など、特別な腐食防止が必要な用途のために、硬質クロムメッキを施したレールおよびキャリッジも用意しています。
電気メッキの重要な利点は以下の通りです。
・優れた防錆性
・優れた摩耗抵抗性と表面荷重負担能力を向上
・表面の微細球状構造に起因する滑らかで速やかな走行性
・優れた凝着性
・コーティング深さの均一性

取付穴の内部、取付ねじおよび転動体はクロムメッキされていませんのでご注意ください。

CN メッキなし
CH 硬質クロムメッキ

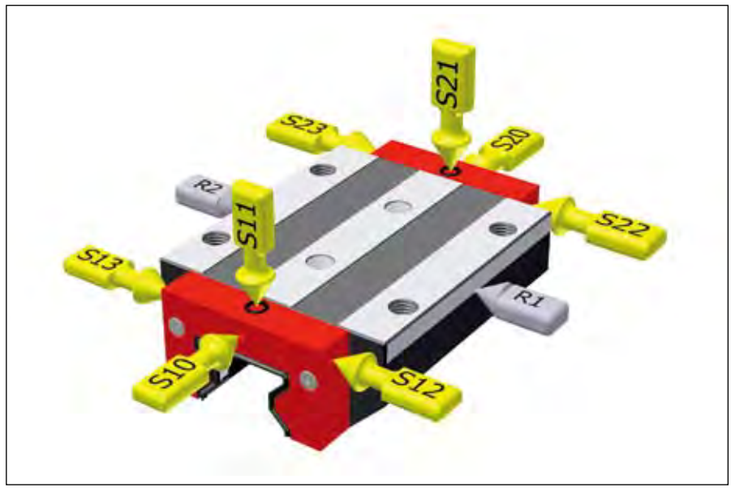

給油口オプション

フロントプレートとキャリッジ本体への潤滑接続には様々なオプションが用意されています。潤滑用ニップルか集中潤滑システムのどちらかを各接続部へネジで接続可能です。一般に、4つのすべての摺動トラックを1箇所の給油口から潤滑供給することが可能です。（スラント軸など）傾いた軸に対する特別の対応として、シュネーベルガーのシステムではキャリッジの両サイドへ独立して潤滑剤を供給することも可能です。これにより、潤滑剤の供給をより確実にし、機械の寿命を延ばすことが可能です。

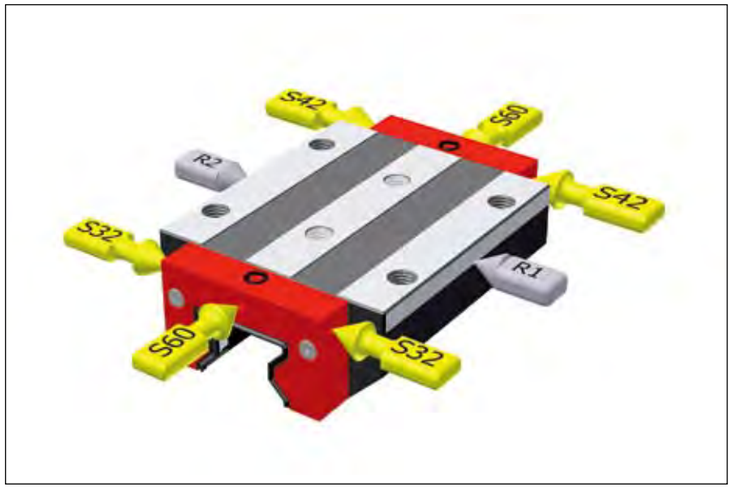

S10 左側中央
S20 右側中央
S11 左側頂部
S21 右側頂部
S12 左側底部
S22 右側底部
S13 左側上部
S23 右側上部
S32 左側
S42 右側
S60 中央

納品時の潤滑剤

一般にレールに取り付けられた状態で納品されるキャリッジは、用途や保管期間および最終的な潤滑剤の種類に応じて様々な潤滑剤を仮に施した状態で納品されます。取り付けおよび運転期間中連続的に強制潤滑を行う場合はオイル（LN）あるいはグリース（LG）を微量施せば十分です。
手動で潤滑剤を注入する場合はフルグリースアップ（LV）での納品を推薦します。

LN オイル保護
LG グリース保護
LV 全面グリース塗布

摩擦

摩擦力はモノレールの特性の中でも重要な数値です。プロファイル型リニアガイドの摩擦を左右する最大のパラメータは、キャリッジのシーリングシステム（ワイパー）の種類や枚数です。次に転動体の接触面の摩擦、そして方向転換や反転する場合の摩擦があります。
潤滑剤の種類、荷重量、速度などアプリケーションにより異なるパラメータも存在します。
摩擦を最小限にするために、シュネーベルガーのプロファイル型リニアガイドのシールやワイパー類は特殊な複合プラスチックで製造されています。シールによる摩擦に対応するため、用途に応じ、シール、ワイパーをカスタマイズするご要望も承っております。

潤滑用部品
グリースニップル

Grease nipple SN 6

Hydraulic-type grease nipple straight

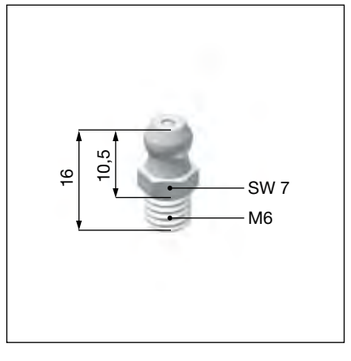

Grease nipple SN 3-T

Flush type grease nipple M 3

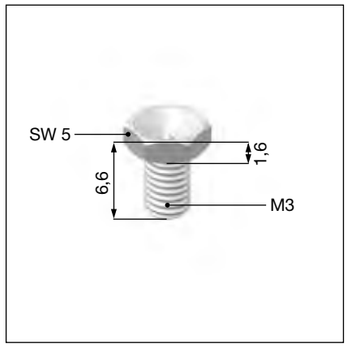

Grease nipple SN 6-45

Hydraulic-type grease nipple 45°

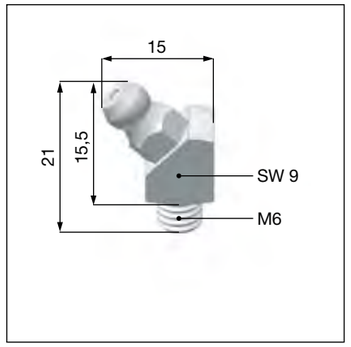

Grease nipple SN 6-T

Flush type grease nipple M 6

Grease nipple SN 6-90

Hydraulic-type grease nipple 90°

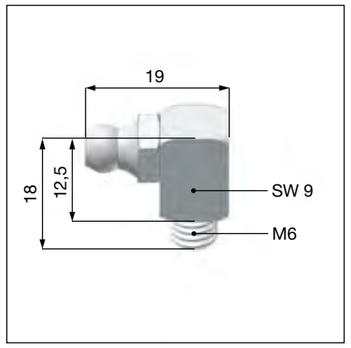

Grease gun SFP-T3

Grease gun for SN3-T and SN6-T

潤滑剤アダプター

Lubrication adapter SA 3-D3

Screw-in connection M 3

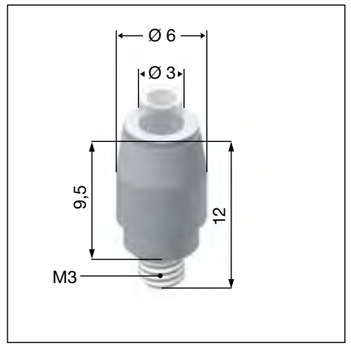

Lubrication adapter SA 6-RD-M8

Lubrication adapter M 8 round-head

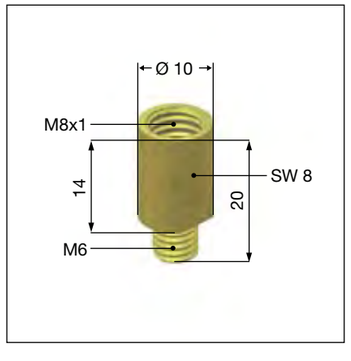

Lubrication adapter SA 6-6KT-M8

Lubrication adapter M 8 hexagon head

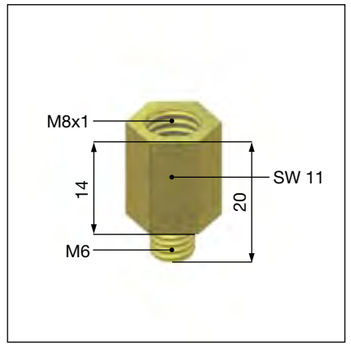

Swivel screw connection SV 6-D4

Swivel screw connection for hose connection 4mm

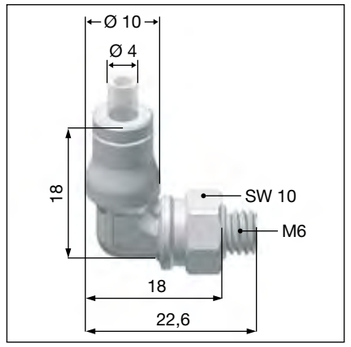

Lubrication adapter SA 6-6KT-G1/8

Lubrication adapter G1/8 hexagon head

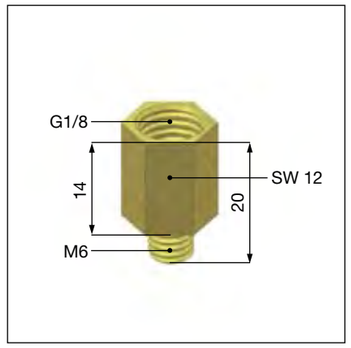

Swivel screw connection SV 6-M6

Swivel screw connection M 6 (aluminum sealing)

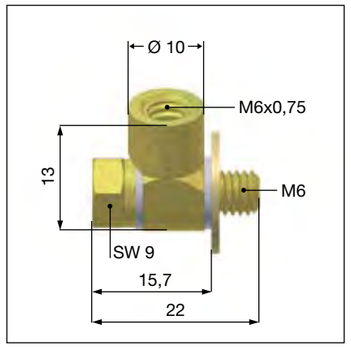

Swivel screw connection SV 6-M8

Swivel screw connection M 8 (aluminum sealing)

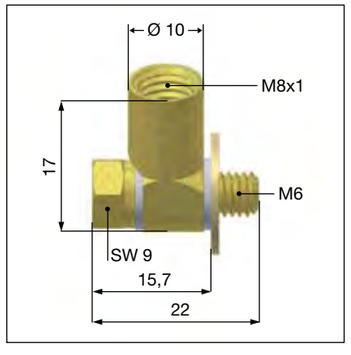

Swivel screw connection SV 6-M6-L

Swivel screw connection M 6 long (aluminum sealing)

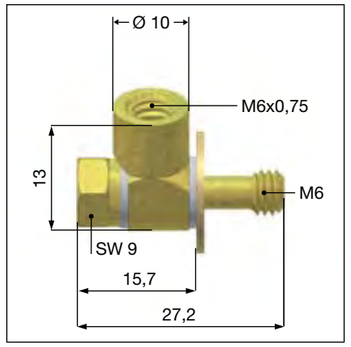

Swivel screw connection SV 6-M8-L

Swivel screw connection M 8 long (aluminum sealing)

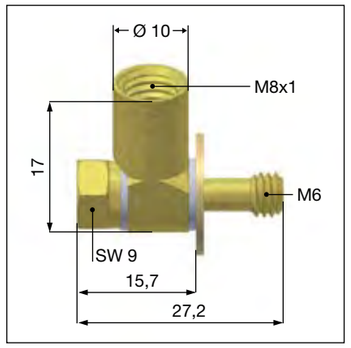

一般的技術データ

通常の使用条件での一般的用途領域

走行	MR	BM
最高速度	3 m/s	5 m/s
最高加速度	50 m/s^2	100 m/s^2

キャリッジの種類、潤滑剤、設置位置、プリテンション、荷重によってはより大きい値を許容可能ですが、事前にシュネーベルガーの代理店に御連絡下さい。

作動環境	MR	BM
作動温度	-40°C - +80°C	-40°C - +80°C
保管温度	-40°C - +80°C	-40°C - +80°C
振動／衝撃	30g	30g

材質	
レール	ベアリング鋼、高周波焼表面
キャリッジ	ベアリング鋼、総焼入処理
転動体	ベアリング鋼、総焼入処理
複合素材	POM、PAPA、TPUなど射出成型加工

選択の特徴

特性

BZモノレールガイドの製品コンセプトは、駆動源であるラック＆ピニオンとガイドを一体化させた、シングルピースで最長6 mまでのモジュール製品にあります。このモジュールを連結することにより、どんな長さの軸も可能になります。

この製品の実現には自社内で開発した、レールとラックの継手部分の加工技術です。
この加工プロセスの確立には長年を費やしました。
また歯付の長軸レールを安全に搬送するために専用梱包材を用意しています。このアルミニウム製の梱包材は、歯付レールに取り付けられ、精度組み付けの工程中はラックに取り付けたままにしておきます。精度調整が終了してから取り外します。この方法で、安全・確実にラック付モノレールを輸送し、固定、調整することが可能です。
BZ用レールは取付穴が標準品の倍数あります。これにより、高い横荷重を吸収し、コンパクトなデザインと高耐トルク荷重を実現しています。

ラック精度等級

シュネーベルガーのモノレールBZはラック一体型ガイドウェイです。ラックは一般に工作機械で多様されるものを選択しています。つまり、騒音を低減し、滑らかな走行を達成するために、モジュールは2.5または2.0から選択できます。ヘリカル角度は19° 31′ 42” です。
平歯のオプションもあります。

熱処理も、調質のみ、高周波、浸炭、総焼入、窒化の5種類から選択が可能です。

お客様のリクエストに応じて、2種類の精度等級があります。
注文コード：
DIN品質5、熱処理後研磨加工ーQ5Hー
DIN品質6、熱処理なしでミーリング加工ーQ6Sー

他の駆動方式との比較

ボールねじなど直動軸に用いられている他の駆動方式に比べると、ラック一体型BZには多くの利点があります。
一軸上で複数の独立した駆動を行うことが可能です。
軸の長さや温度に関係なく、優れた駆動剛性を維持できます。
一軸上で部分的にラックが摩耗した場合でも、その部分のみラック交換が可能です。
精密に加工されたレールとラックのコンビネーションが極めて滑らかなピニオン走行を可能にします。
駆動システム内の予圧は全長にわたって維持することが可能です。
適切なモーターあるいはギヤボックスと組み合わせることにより、停電時のオートロック機構を付けることが可能です。

リニアモーターと比較しても、BZモノレールは非常に経済的でシンプルなソリューションです。BZモは、長軸、ホットチップやクーラントオイルのかかる困難な環境の機械上でも常に安定し、コストメリットの高い駆動を実現します。

一般的技術データ

2.1「技術データ ガイド」を参照してください。

磁気抵抗性素子による位置検出
リニアエンコーダとしての機能

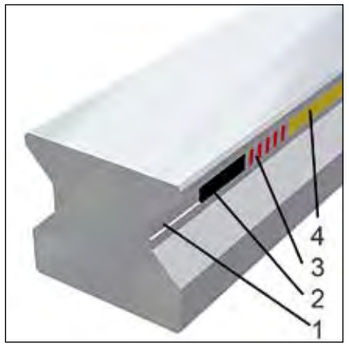

一体型エンコーダの構造

スケールは2種類の磁気トラックを有します。1つ目はファイン・インクリメンタルトラックで、N極とS極が200μmピッチで刻まれています。2つ目が絶対位置を検出するためのリファレンストラックです。リファレンストラックは一定間隔のディスタンスコードか、シングルリファレンスマークから選択が可能です。

スケールはレール内部に完全に格納されています。レールに加工されたスケール用の溝を先ず精密に研磨加工します（1）、そこへスケールとなる磁気抵抗素子（2）を取りつけます。この磁性材料を更に精度研磨し、自社開発機によりNS極を刻みます（3）。スケールを保護するため、磁気透過性の硬いカバーバンドをレールにレーザー溶接します（4）。

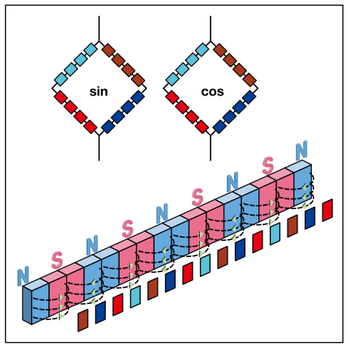

磁気抵抗性のある位置決めセンサー

センサーとスケールの間に相対的な動きが生じると、磁界の変化が測定可能な電気抵抗の変化に変換されます。温度、環境磁場、電磁ノイズ、経年劣化によるあらゆる障害はホイートストーンブリッジ回路により影響を最低限に抑えるよう設計されています。

90° 位相した二つのサイン・コサイン信号が鎌状のセンサー素子配列によるインクリメンタル型磁気スケールから得られます。位置検出精度を向上させるため、測定方向に沿い104の個々のエレメントからの信号を平均化したものを読み取っています。センサーの素子構造は磁気周期との最適化を行ってありますので、周辺の他の磁場からの干渉はありません。一例としてリニアモータとも併用することが可能です。

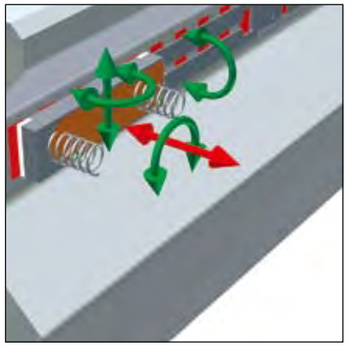

センサー機能の独立性

位置検出の精度を決定するパラメータ、つまり位相精度、ゲイン、ハーモニック特性はセンサー内部でアンカーリングされています。そのため、仮にセンサー部の位置が大きくずれたり、センサーがねじれたりすることがあっても信号の品質低下は起こりにくくなっています。回路は常に安定しています。
メンテナンス上の利点は、特別な調整作業なしに読取ヘッドを簡単に交換できることです。
振動や衝撃に対する抵抗力に優れ、読取ヘッドの読取許容範囲が広いことです。

AGC（自動ゲインコントロール）の存在

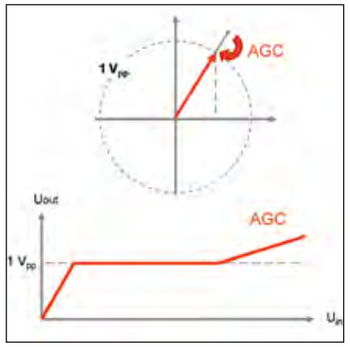

AGCが常に働いています。

周期信号で示されるゲイン値は常にモニタリングされています。どのようなずれが生じても振幅は調整されます。そのため、読取ヘッドに未定義の位置ずれが起こった場合でも、ほとんどの場合安定した出力が得られます。

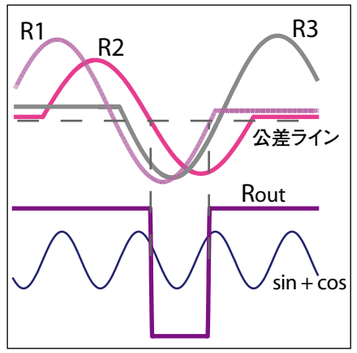

原点の認識方法

第2のトラックはAMSのリファレンスマークが刻まれており、絶対位置の検出に不可欠です。原点の正確さは機械の原点にとっても非常に重要です。原点は、3つの磁気参照マーカーの複合によって表されます。サインコサイン波の山と谷の側面がそれぞれ一つのリファレンスを表しています。3つ目のリファレンスは通常は不要ですが、未定義な信号エラーが起こった際のバックアップとして常に存在しており、原点検出の信頼性を向上しています。この操作原理はいかなる磁気干渉も抑制しますが、万一不安定な環境下において磁気干渉が生じた際は安全面から決してリファレンス信号を与えないようになっています。

お客様に選択いただく技術オプション
磁化

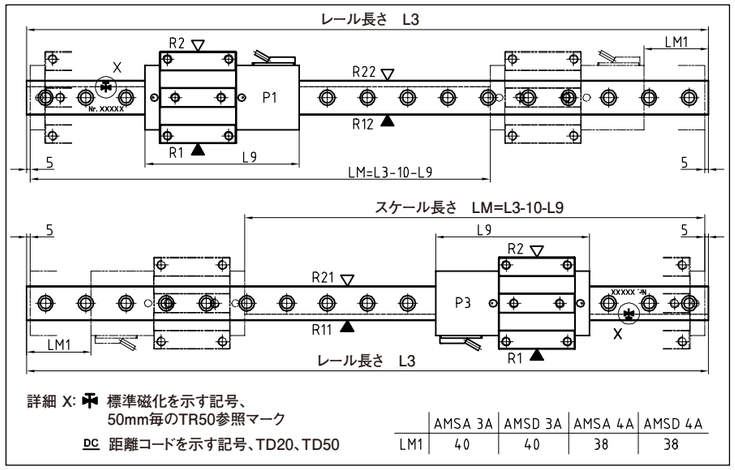

	AMSA 3A	AMSD 3A	AMSA 4A	AMSD 4A
LM1	40	40	38	38

AMSモノレール製品のリファレンスマークは様々なオプションから選択が可能です。図のLM値は最初のリファレンスマークを認識する読取ヘッド付キャリッジの位置を示しています。

TR50： 50 mmピッチでリファレンスマークグリッドを刻む（標準）

TD50： ディスタンスコード化されたリファレンスマーク
リファレンスのピッチは50.2/49.8/50.4/49.6/50.6/49.4/../../…mm

TD20： ディスタンスコード化されたリファレンスマーク
リファレンスのピッチは20.2/19.8/20.4/19.6/20.6/19.4/../../…mm
ただし当オプションは2.8 mまでのスケールにのみ使用可

TR50 50 mmピッチのリファレンスマークグリッド
TD50 ディスタンスコード、50 mmパターン
TD20 ディスタンスコード、20 mmパターン

読取ヘッド位置と取付側

初めてのご注文の際、シュネーベルガーは、上図のような図面で機械的モノレールのそれぞれの基準面、読み取りヘッドの取り付け位置と向き、スケールの位置と長さの位置相関図を表示の上確認させていただきます。注文時には下記の情報について全てお客様から選択いただく必要があります。（一つでも情報が欠けている場合は、受注できません。）

レールの取付基準面およびスケールの位置
R11 下部に取付基準、下部にスケール
R12 下部に取付基準、上部にスケール
R21 上部に取付基準、下部にスケール
R22 上部に取付基準、上部にスケール

読み取りヘッド位置
P1 右側にハウジング、上部に読み取りヘッド
P3 左側にハウジング、下部に読み取りヘッド

キャリッジの取付基準面
R1 下部に基準
R2 上部に基準

読取ヘッドインターフェース
インターフェースのピンレイアウト

インターフェース TSU／TSD

12ポール円形プラグ
（ユニオンナットおよび雌ねじ付）
ケーブル長さ：3 m

TSU
TSD

インターフェース TRU／TRD

12ポール円形プラグ（雄ねじ付）
ケーブル長さ：3 m

TRU
TRD

インターフェース TMU／TMD

12ポール円形プラグ
（取り付けベースに組み込み）
ケーブル長さ：0.3 m

TMU
TMD

ターミナルレイアウト

	インターフェース TSU/TRU/TMU		インターフェース TSD/TRD/TMD	
コンタクト	信号	信号種類	信号	信号種類
1	-Ua2	ーコサイン	-Ua2	A quad B 信号
2	+5Vセンサー	供給電圧戻り	+5Vセンサー	供給電圧戻り
3	+Ua0	参照信号	+Ua0	同期参照信号
4	-Ua0	参照信号	-Ua0	同期参照信号
5	+Ua1	＋サイン	+Ua1	A quad B 信号
6	-Ua1	ーサイン	-Ua1	A quad B 信号
7	-Uas	NC	-Uas	低活性エラー信号、最小持続時間20ms
8	+Ua2	＋コサイン	+Ua2	A quad B 信号
9	-	NC	-	
10	0V(GND)	供給電圧	0V(GND)	供給電圧
11	0Vセンサー	供給電圧戻り	0Vセンサー	供給電圧戻り
12	+5V	供給電圧	+5V	供給電圧

TSU／TRU／TMUアナログ電圧インターフェース

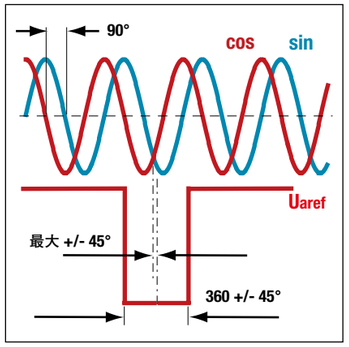

信号はゲイン微分により反転させられた形で示されます。インクリメンタル信号は正確に90°位相されます。インクリメンタル信号もリファレンス信号も1±0.1Vppです。インクリメンタル信号の電圧公差は0.6Vppから1.2Vppです。
標準仕様では、リファレンス信号用パルスは90度位相されたサイン信号とコサイン信号の交点（つまり45°位置）に対して左右対象的に送られます。リファレンスパルスのパルス幅と位相位置は図に示す通り公差がごく僅かです。レシーバー側では、リファレンスマークの精度は、他のインクリメンタル信号を併用することにより向上することが可能です。

このインターフェースは1Vppの電圧インターフェースの標準的な全ての制御システムで機能します。

TSD／TRD／TMDデジタルインターフェースの場合

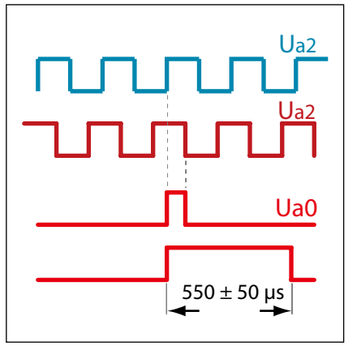

インクリメンタル信号A+、A−、B+、B−およびリファレンス信号R+, R-はRS422により、相当データを送信します。図は正信号を示しています。個々の信号のレベルは以下の通りです。

高>2.5V
低<0.5V

信号の上昇と下降の時間は20 ns以下です。最小信号幅は最大出力周波数から計算することが可能です。コントローラ側に最大出力周波数の処理能力があることを確認してください。

オプション**ZN**：リファレンスパルスは正確にインクリメンタル信号と同期します。
オプション**ZF**：リファレンスパルスは550 µs ± 50 µsまで拡張します。このオプションは多数の短時間の参照インパルスを処理できない評価エレクトロニクスで用いられます。

内挿定数、最大出力周波数および**リファレンスパルス導入**の以下の組み合わせが利用可能です。

-010-80-ZN 5 µm、内挿 10X、最大出力周波数 8 MHz
-050-80-ZN 1 µm、内挿 50X、最大出力周波数 8 MHz
-250-80-ZN 0.2 µm、内挿 250X、最大出力周波数 8 MHz
-010-80-ZF 5 µm、内挿 10X、最大出力周波数 8 MHz
-050-80-ZF 1 µm、内挿 50X、最大出力周波数 8 MHz
-250-80-ZF 0.2 µm、内挿 250X、最大出力周波数 8 MHz

注文コード（例）：
-010-80-ZN-　内挿定数 10 、最大出力周波数 8 MHz、リファレンスパルス標準

付属品ーケーブル
概要

アナログ読取ヘッド用ケーブル

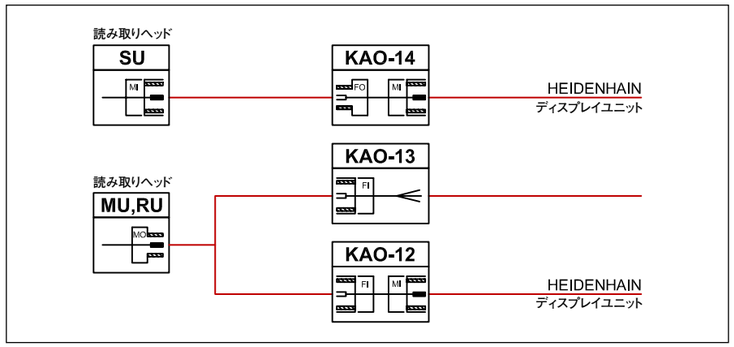

デジタル読取ヘッド用ケーブル

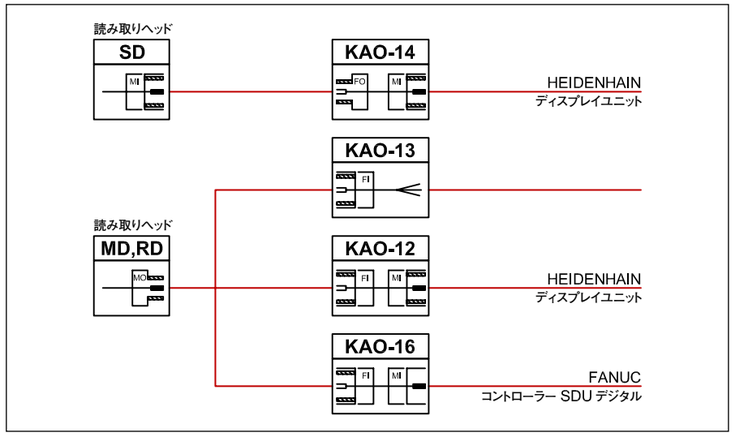

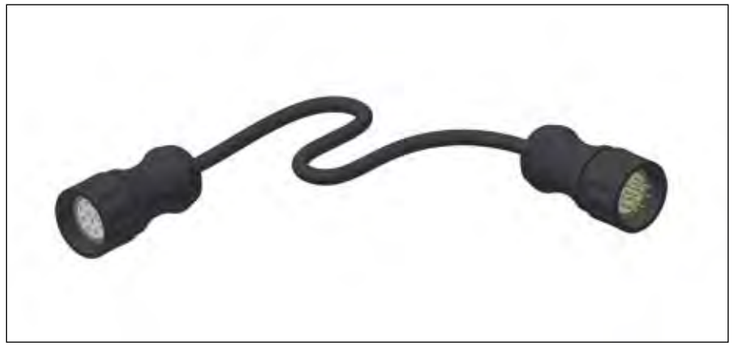

KAO 12

接続ケーブル、12ポール、
雌ねじ付きソケットー雌ねじ付きプラグ
注文コード：**KAO 12−xx**
ｘｘ＝長さ（m）、利用できる長さ 3、5、10、15、20m
注文例：KAO12−5

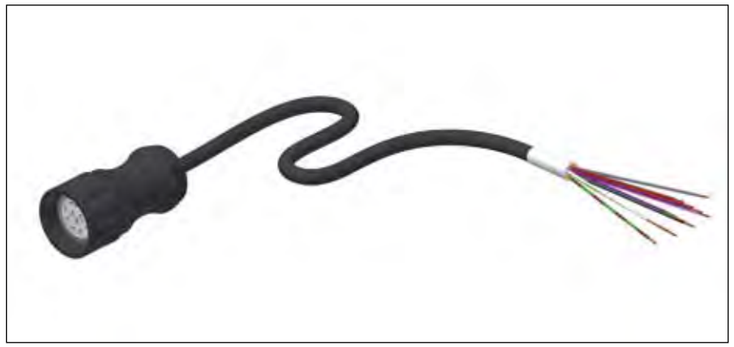

KAO 13

接続ケーブル、12ポール、
雌ねじ付きソケットー開放端
注文コード：**KAO 13−xx**
ｘｘ＝長さ（m）、利用できる長さ 3、5、10、15、20m
注文例：KAO13−5

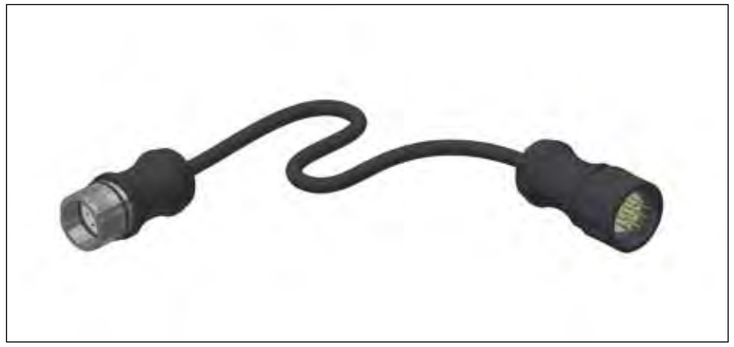

KAO 14

延長ケーブル、12ポール、
雄ねじ付きソケットー雌ねじ付きプラグ
注文コード：**KAO 14−xx**
ｘｘ＝長さ（m）、利用できる長さ 3、5、10、15、20m
注文例：KAO14−5

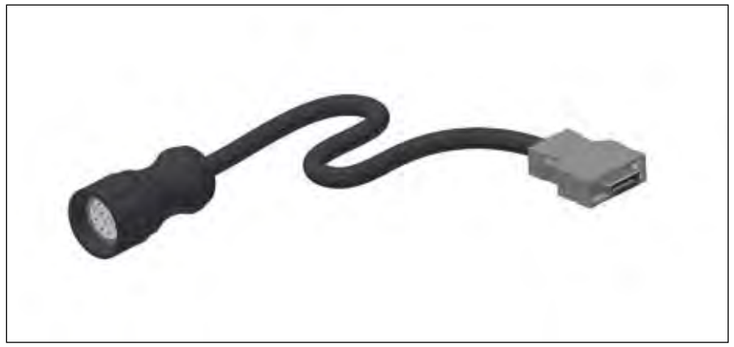

KAO 16

接続ケーブル、12ポール、
雌ねじ付きソケットーFANUCプラグ
注文コード：**KAO 16−xx**
ｘｘ＝長さ（m）、利用できる長さ 3、5、10、15、20m
注文例：KAO16−5

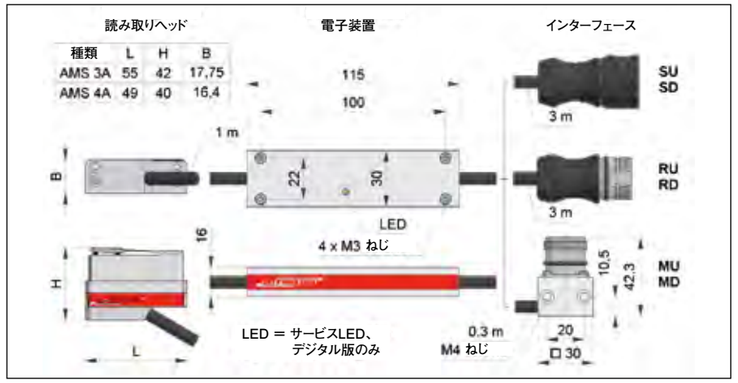

読み取りヘッド寸法概略

一般的技術データ

システム特性

材料測定	超硬度・磁気抵抗素子（N極S極）
信号周期	200 µm

作動環境

対汚染性	IP68
作動温度	0°C - +70°C
保管温度	-20°C - +70°C
振動／衝撃	30g

AMSA 3AおよびAMSA 4A

精度

精度等級	+/-5 µm / 1000 mm +/-2 µm / 40 mm
周期のずれ	+/-0.7 µm
分解能	内挿により最大 0.0625 µm
ヒステリシス	< 0.5 - 1 µm

インターフェース

アナログ	電圧インターフェース 1 Vpp
供給電圧	5 V +/- 0.25 V
消費電流	読み取りヘッド当たり 40 mA

AMSD 3AおよびAMSD 4A

精度

精度等級	+/-5 µm / 1000 mm +/-2 µm / 40 mm
周期のずれ	+/-1.0 µm
分解能	0.2 µm / 1.0 µm / 5.0 µm
ヒステリシス	< 0.5 mm またはデジタル的に調整可能

インターフェース

デジタル	参照およびエラー信号をともなう直交信号 リファレンスパルス幅90°または500 µs（FANUC-CNCに対して）
供給電圧	5 V +/- 0.25 V
消費電流	読み取りヘッド当たり 110 mA

製品構成をよりわかりやすくするために、モノレールガイドウェイの注文での重要事項や注文方法をカタログの新版で更新してきました。
新しい注文コードでは、交換部品のような個別の製品またガイドレールとキャリッジの個別の組み合わせの両方に対して、モノレールガイドの完全なセットと同様明確な注文がしていただけます。
レール、キャリッジ、部品には別個の注文コードが付けられています。レールとキャリッジの異なるヴァージョンにもこの方法が採られています。
個々のレール、キャリッジ、付属品の注文コードは本カタログのデータの部分に記載してあります。注文時の間違いを減らすため、すべてのヴァージョンをコード化しようと努力してきました。

組み立て済みのものを注文する場合は、下記の注文スケジュールを御利用下さい。

モノレールシステムの注文コード

セット構成	**NB**
/n x S	S=ドイツ語の「Schiene」に由来、「レール」の意
/n x W	W=ドイツ語の「Wagen」に由来、「キャリッジ」の意
/n x Z（オプション）	Z=ドイツ語の「Zubehoer」に由来、「付属品」の意
/n x S（オプション）	"/"は異なるパーツの始まりを表す
/n x W（オプション）	nは数量を表す
/n x Z	

図面と注文コードの例

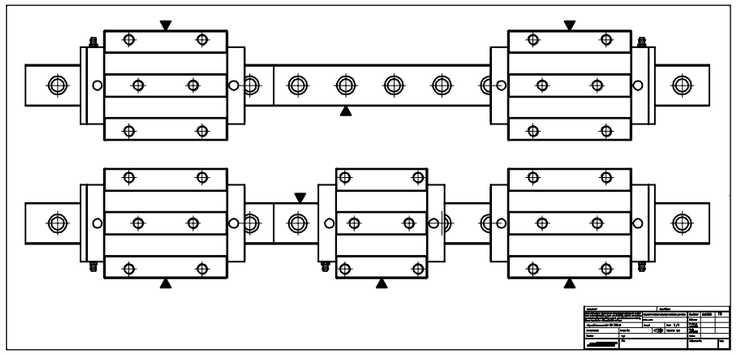

2つの異なるレール（各々2本のレールを連結）、5つの異なるキャリッジ。
レール、キャリッジ、付属品の位置は、レイアウトスケッチなしでは明確に決定できません。

セット構成
/ 1 x MR S 35-ND-G1-KC-R1-2478-19-19-CN (部分長さ L3 = 999mm/1479mm)
/ 1 x MR W 35-B-G1-V3-R2-CN-S13-LN
/ 1 x MR W 35-B-G1-V3-R2-CN-S23-LN
/ 1 x MR S 35-ND-G1-KC-R2-2478-19-19-CN (部分長さ L3 = 999mm/1479mm)
/ 1 x MR W 35-B-G1-V3-R1-CN-S12-LN
/ 1 x MR W 35-A-G1-V3-R1-CN-S12-LN
/ 1 x MR W 35-B-G1-V3-R1-CN-S22-LN
/ 5 x MRK 35 (125個)
/ 4 x ZCN 35

重要:
モノレールシステムを正確に受注するためには、注文コードとは別に図面が必要です。
お急ぎの場合は、先ずはハンドスケッチでも構いませんので、必ずレイアウトスケッチを注文に含めていただく必要があります。
・多数の部分からなるレールの各部分の長さと配列
・1つのレール上のキャリッジのタイプが異なる場合のそのタイプと位置
・追設のワイパー、潤滑パネル、潤滑設備の位置
　レール、キャリッジそれぞれの基準面関係
　給油口のタイプと位置

ご留意いただきたい点

お客様にお選びいただいたシュネーベルガー社のモノレールがその製品寿命期間を通じて確実に最高の性能を維持するために、下記の点に御留意下さい。

すべてのシュネーベルガー製品は高精度に加工されており、これらの国際輸送に耐えうる様、工場で適切に防護梱包されます。国際輸送により受けうる衝撃、振動、湿気から製品を確実に保護する必要があります。

AMS製品については個別のメンテナンスガイドなどのマニュアルをご用意しております。

モノレールの取り付けとレール取付穴を塞ぐ作業は、経験のある技術者により作業が必要です。
取付マニュアル等は別途ご用意しておりますので、ご入り用の際は、当社ホームページからダウンロードいただくか、日本シュネーベルガー営業部にお問い合わせ下さい。

モノレールには、アプリケーションや作動条件に適した潤滑剤が必ず必要です。当社は自社内で潤滑剤の製造は行っておりませんが、潤滑剤メーカーへの助言、共同開発に参与しております。当社の推薦タイプはwww.schneeberger.comで見ることが可能です。または、日本シュネーベルガー営業部にお問い合わせ下さい。

またクーラントオイルと潤滑剤の互換性の確認は、機械の安全な稼働の為に非常に重要です。

切削屑、研磨粉、金属片ならびにそれらの混入したクーラントオイルとの接触から保護するために、モノレールは機械上でカバーを取り付け、取付位置や方向にも工夫を凝らして下さい。

機械上で加工中に切削屑、研磨粉、金属片ならびにそれらの混入したクーラントオイルとの著しい接触が予想される場合、追加ワイパーが必要になります。また全てのワイパー類は、摩耗や亀裂を定期的に検査し、必要に応じて交換するなど定期的メンテナンスが必要になります。詳しくはwww.schneeberger.comでご覧いただくか、日本シュネーベルガー営業部にお問い合わせ下さい。

3.0 MONORAIL MR

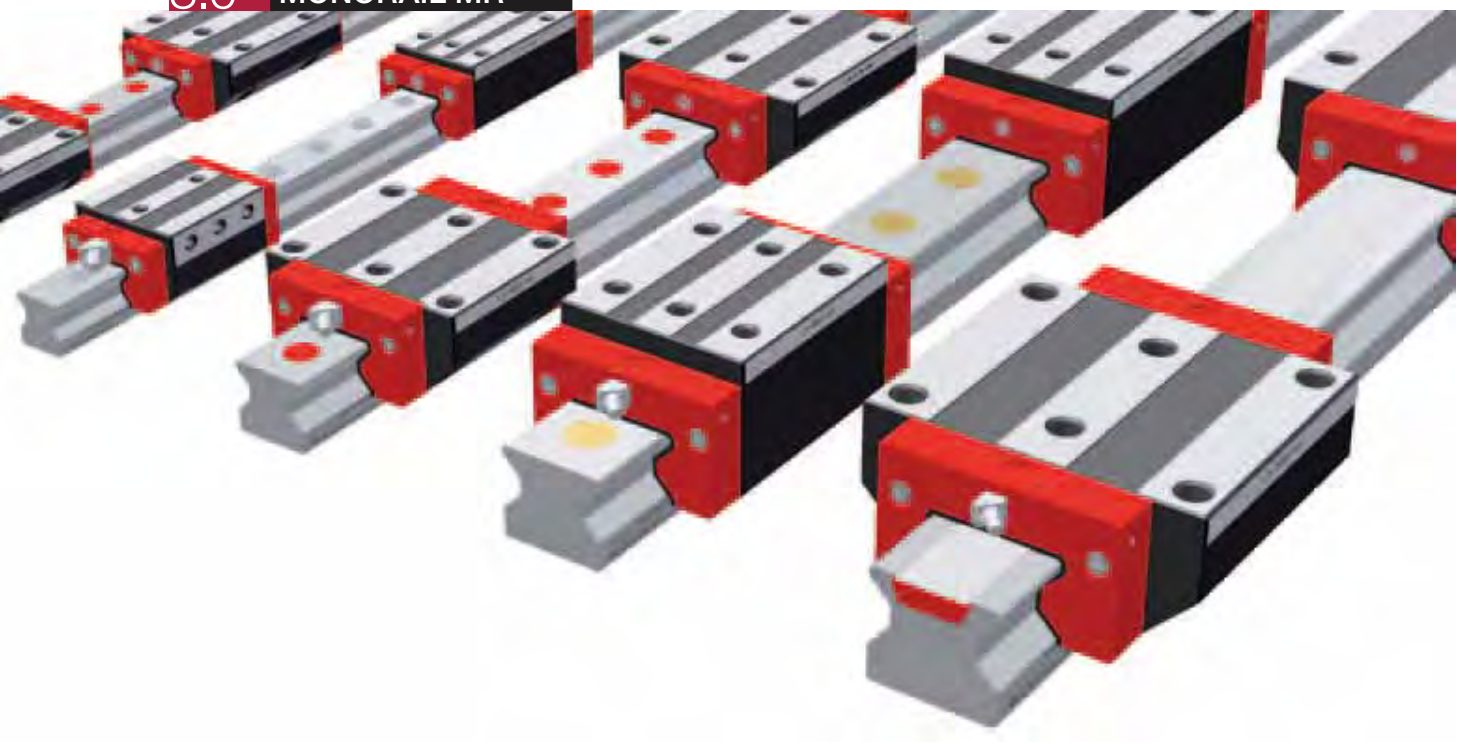

Exceptional rigidity, high dynamic and static load-carrying capacities, outstanding smooth running and a fully sealed carriage are the main features of the MONORAIL MR Roller Guideway. Specifically designed for machine tools, these properties result in higher machining rates plus enhanced geometrical accuracy and surface quality of the machined component. The exceptional all-round rigidity of the products and the method of connection with the surrounding structure provide improved vibration behaviour at lower amplitudes therefore extending tool life.
Many years of experience in the design, production and use of roller-type guideways as well as the most advanced technologies in product development and volume production are consistently applied and continuously improved. The MONORAIL MR Guideway is a cost-effective solution that meets the demands of modern machine-tool design.

Features of System MONORAIL MR

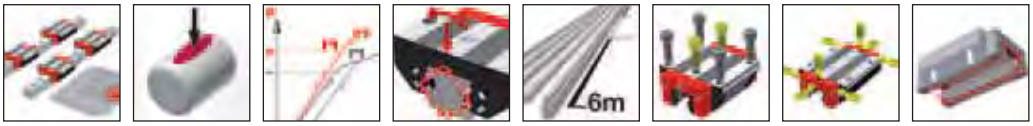

Details see chapter 1

3.1 Overview of types, sizes and available options

3.2 Technical data and options

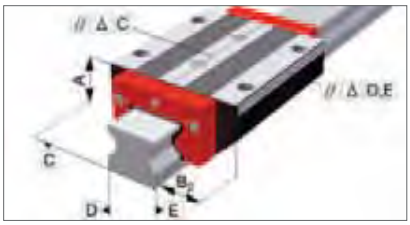

3.3 Accessories MONORAIL MR

3.4 Order key

Product overview MR Rails





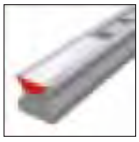
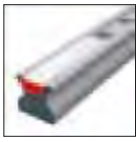

Buildsizes / Rail build forms	**N** standard	**ND** standard, through hardened	**NU** with tapped holes at the bottom	**NUD** with tapped holes, through hardened	**C** for cover strip	**CD** for cover strip, through hardened
Size 25	MR S 25-N	MR S 25-ND	MR S 25-NU		MR S 25-C	MR S 25-CD
Size 35	MR S 35-N	MR S 35-ND	MR S 35-NU	MR S 35-NUD	MR S 35-C	
Size 45	MR S 45-N	MR S 45-ND	MR S 45-NU		MR S 45-C	
Size 55	MR S 55-N		MR S 55-NU		MR S 55-C	
Size 65	MR S 65-N		MR S 65-NU		MR S 65-C	
Size 100	MR S 100-N					
Features						
Screwable from above	●	●			●	●
Screwable from below			●	●		
Small assembly effort			●	●	●	●
Great single-part system length	●		●		●	
Usable for bombardment with metal chips				●		
For the support of metal covers		●		●		

Available options for MR Rails

Details see chapter 2

Accuracy

- G0 Highly accurate
- G1 Very accurate
- G2 Accurate
- G3 Standard

Straightness

- KC Standard

Reference side

- R1 Ref. at bottom
- R2 Ref. on top

Coating

- CN None
- CH Hard chromium

Available accessories for MR Rails

Details see chapter 3.3

Plugs

Cover strips

Assembly tools

3.1 Overview of types, sizes and available options MR Carriages

Product overview MR Carriages

Buildsizes / Carriage build forms	A standard	B standard, long	C compact, high	D compact, high, long	E compact, high, for lateral fixation	F compact	G compact, long
Size 25	MR W 25-A	MR W 25-B	MR W 25-C	MR W 25-D	MR W 25-E	MR W 25-F	MR W 25-G
Size 35	MR W 35-A	MR W 35-B	MR W 35-C	MR W 35-D	MR W 35-E		
Size 45	MR W 45-A	MR W 45-B	MR W 45-C	MR W 45-D		MR W 45-F	
Size 55	MR W 55-A	MR W 55-B	MR W 55-C	MR W 55-D			MR W 55-G
Size 65	MR W 65-A	MR W 65-B	MR W 65-C	MR W 65-D			
Size 100		MR W 100-B					
Features							
Screwable from above	●	●	●	●		●	●
Screwable from below	●	●					
Screwable from the side					●		
For high loads and moments		●		●			●
For medium loads and moments	●		●		●	●	
For limited installation space						●	●

Available options for MR Carriages

Details see chapter 2

Accuracy

- G0 Highly accurate
- G1 Very accurate
- G2 Accurate
- G3 Standard

Preload

- V1 Low
- V2 Medium
- V3 High

Reference side

- R1 Anschlag unten
- R2 Ref. on top

Coating

- CN None
- CH Hard chromium

Lube connections

- S10 Left center
- S20 Right center
- S11 Top left
- S21 Top right
- S12 Lower left side
- S22 Lower right side
- S13 Upper left side
- S23 Upper right side
- S32 Left side
- S42 Right side
- S60 Center

Lubrication

- LN Oil protect
- LG Grease protect
- LV Full greasing

Available accessories for MR Carriages

Details see chapter 3.3 and 2.1

Additional wipers
Front plates
Bellows
Lube nippels
Assembly rails
Lube adapters
Lubrication plates

MR S 25 Drawings

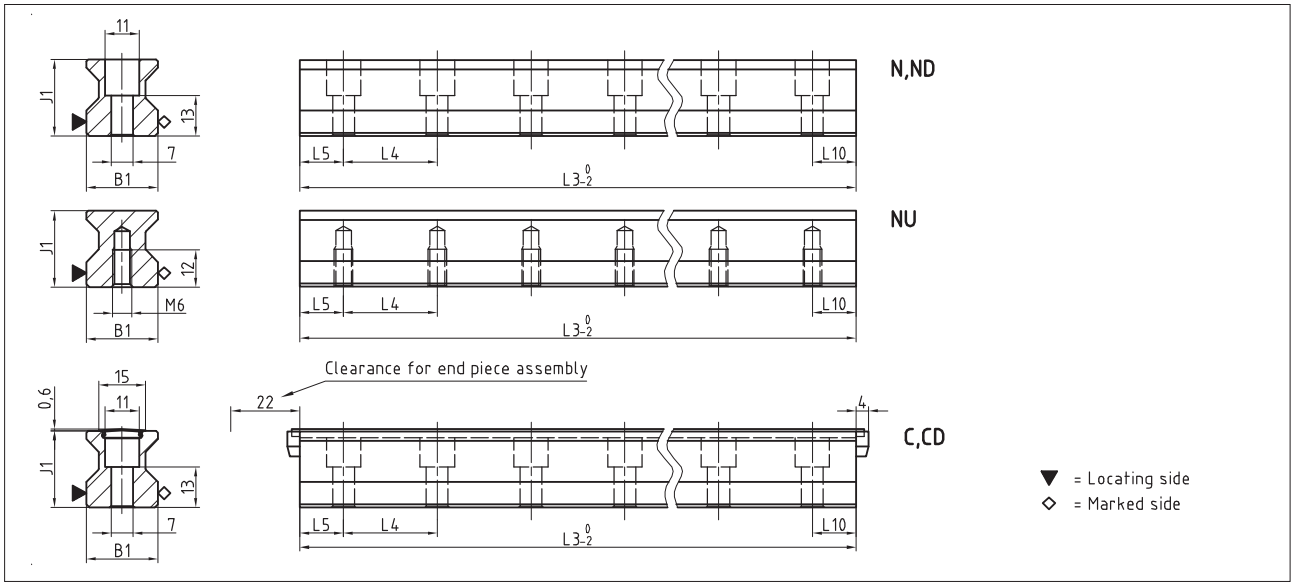

MR W 25 Drawings

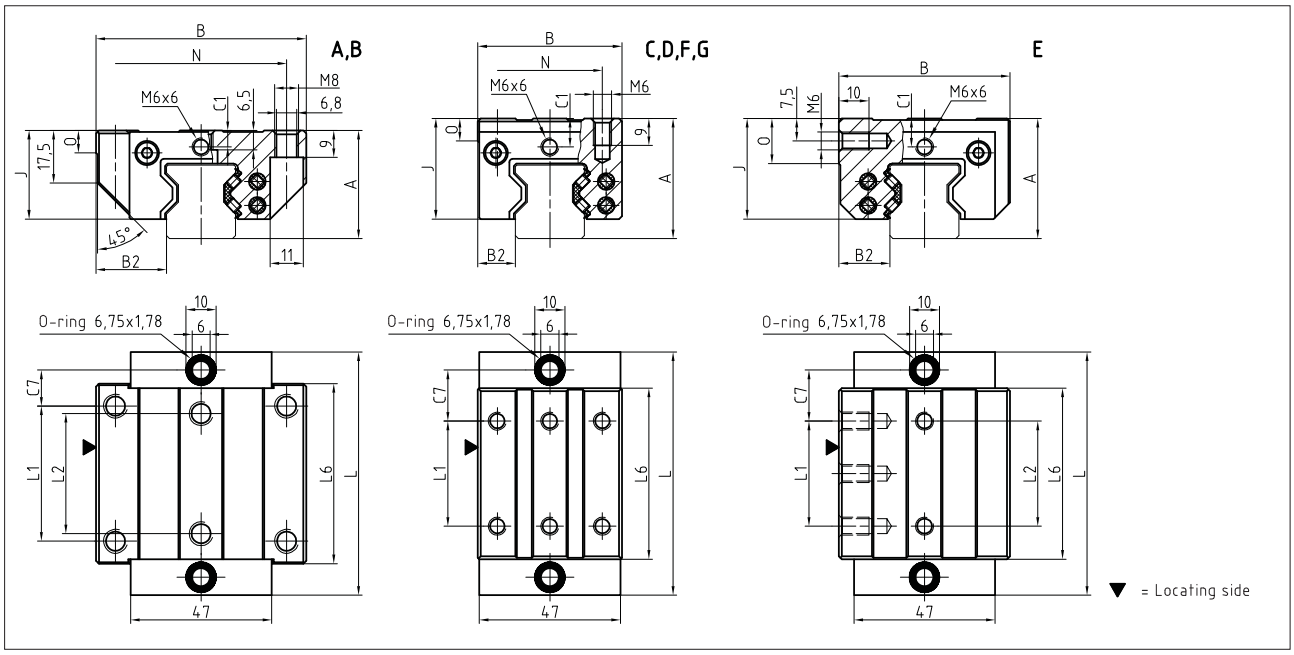

MR W 25 Rigidity diagram

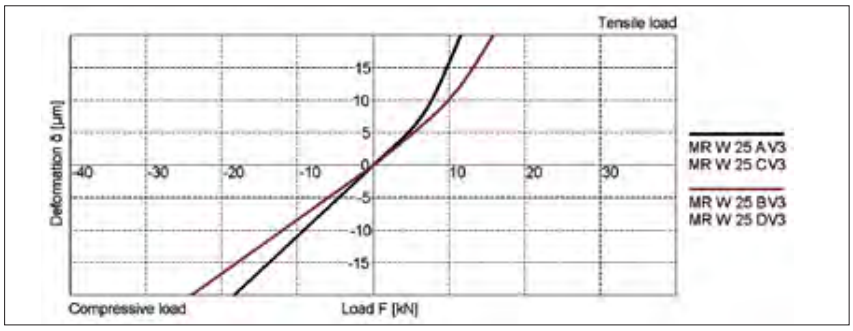

MR W 25 Load rating

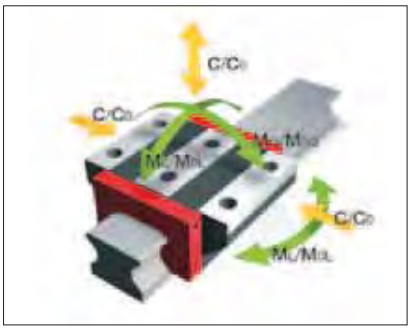

MR S 25 Dimensions




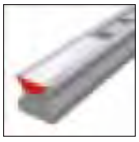


	MR S 25-N	MR S 25-ND	MR S 25-NU	MR S 25-C	MR S 25-CD
B1: Rail width	23	23	23	23	23
J1: Rail height	24.5	24.5	24.5	24.5	24.5
L3: Rail length max.	6000	1500	6000	3000	1500
L4: Spacing of fixing holes	30	30	30	30	30
L5/L10:Position of first/last fixing hole	13.5	13.5	13.5	13.5	13.5
Gew.: Rail weight, specific (kg/m)	3.4	3.4	3.8	3.3	3.3

Available options for MR S 25

MR W 25 Dimensions and capacities







	MR W 25-A	MR W 25-B	MR W 25-C	MR W 25-D	MR W 25-E	MR W 25-F	MR W 25-G
A: System height	36	36	40	40	40	36	36
B: Carriage width	70	70	48	48	57	48	48
B2: Distance between locating faces	23.5	23.5	12.5	12.5	17	12.5	12.5
C1: Position of center front lube hole	5.5	5.5	9.5	9.5	9.5	5.5	5.5
C3: Position of lateral lube hole	-	-	-	-	-	-	-
C4: Position of lateral lube hole	-	-	-	-	-	-	-
C7: Position of top lube hole	12	23.2	17	20.7	17	17	20.7
J: Carriage height	29.5	29.5	33.5	33.5	33.5	29.5	29.5
L: Carriage length	81	103.4	81	103.4	81	81	103.4
L1: Exterior fixing hole spacing	45	45	35	50	35	35	50
L2: Interior fixing hole spacing	40	40	-	-	35	-	-
L6: Steel body length	60	79.4	57	79.4	57	57	79.4
N: Lateral fixing hole spacing	57	57	35	35	-	35	35
O: Reference face height	7.5	7.5	7.5	7.5	15	7.5	7.5
Capacities and weights							
C0: Static load capacitiy (N)	49800	70300	49800	70300	49800	49800	70300
C100: Dynamic load capacity (N)	27700	39100	27700	39100	27700	27700	39100
M0Q: Static cross moment capacity (Nm)	733	1035	733	1035	733	733	1035
M0L: Static longitud. moment capacity (Nm)	476	936	476	936	476	476	936
MQ: Dyn. cross moment capacity (Nm)	408	576	408	576	408	408	576
ML: Dyn. longitud. moment capacity (Nm)	265	521	265	521	265	265	521
Gew: Carriage weight (kg)	0.7	0.9	0.6	0.7	0.7	0.5	0.6

Available options for MR W 25

MR S 35 Drawings

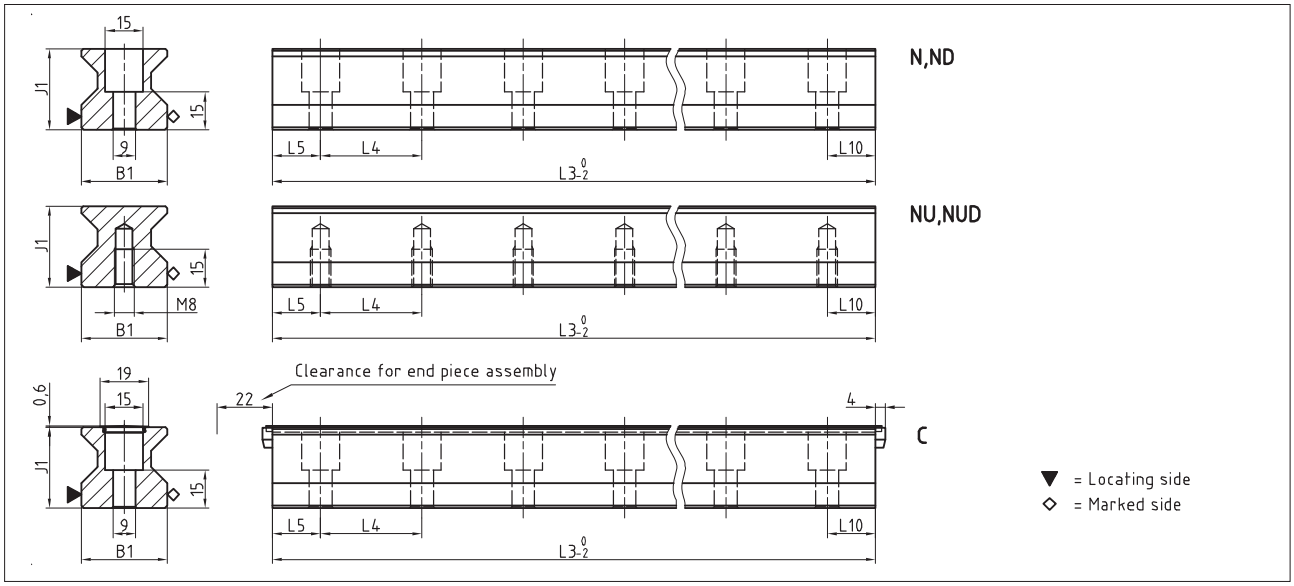

MR W 35 Drawings

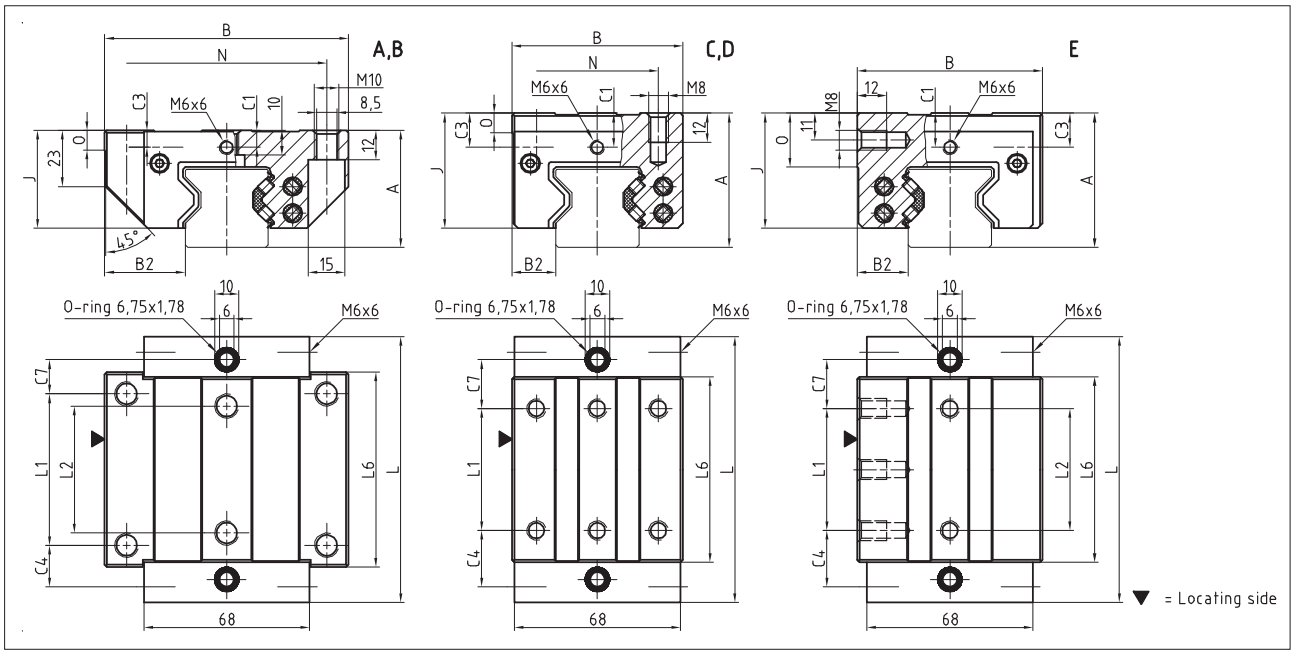

MR W 35 Rigidity diagram

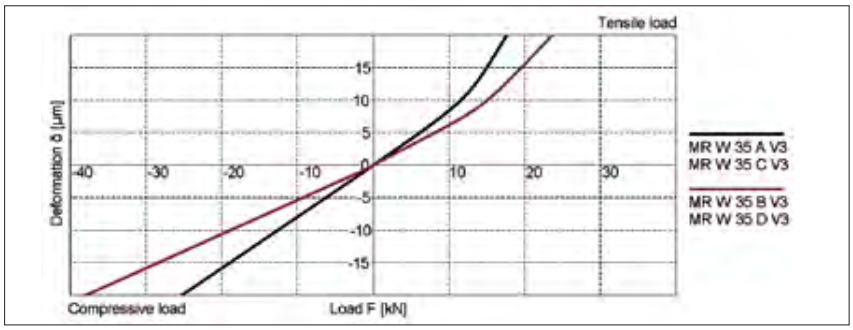

MR W 35 Load rating

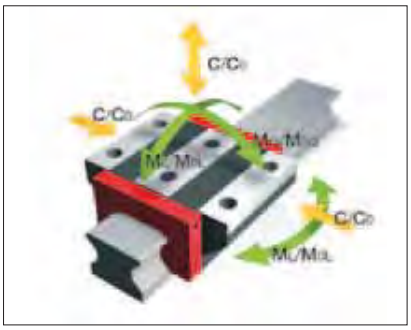

MR S 35 Dimensions





	MR S 35-N	MR S 35-ND	MR S 35-NU	MR S 35-NUD	MR S 35-C
B1: Rail width	34	34	34	34	34
J1: Rail height	32	32	32	32	32
L3: Rail length max.	6000	1500	6000	1500	6000
L4: Spacing of fixing holes	40	40	40	40	40
L5/L10:Position of first/last fixing hole	18.5	18.5	18.5	18.5	18.5
Gew.: Rail weight, specific (kg/m)	6.5	6.5	7.1	7.1	6.3

Available options for MR S 35

MR W 35 Dimensions and capacities





	MR W 35-A	MR W 35-B	MR W 35-C	MR W 35-D	MR W 35-E
A: System height	48	48	55	55	55
B: Carriage width	100	100	70	70	76
B2: Distance between locating faces	33	33	18	18	21
C1: Position of center front lube hole	7	7	14	14	14
C3: Position of lateral lube hole	7	7	14	14	14
C4: Position of lateral lube hole	17	30.5	23	25.5	23
C7: Position of top lube hole	14	27.5	20	22.5	20
J: Carriage height	40	40	47	47	47
L: Carriage length	109	136	109	136	109
L1: Exterior fixing hole spacing	62	62	50	72	50
L2: Interior fixing hole spacing	52	52	-	-	50
L6: Steel body length	80	103	76	103	76
N: Lateral fixing hole spacing	82	82	50	50	-
O: Reference face height	8	8	8	8	22
Capacities and weights					
C0: Static load capacitiy (N)	93400	128500	93400	128500	93400
C100: Dynamic load capacity (N)	52000	71500	52000	71500	52000
M0Q: Static cross moment capacity (Nm)	2008	2762	2008	2762	2008
M0L: Static longitud. moment capacity (Nm)	1189	2214	1189	2214	1189
MQ: Dyn. cross moment capacity (Nm)	1118	1537	1118	1537	1118
ML: Dyn. longitud. moment capacity (Nm)	662	1232	662	1232	662
Gew: Carriage weight (kg)	1.6	2.2	1.5	2.0	1.8

Available options for MR W 35

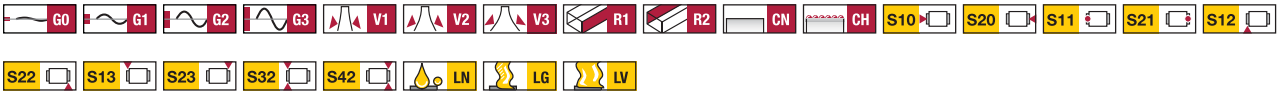

MR S 45 Drawings

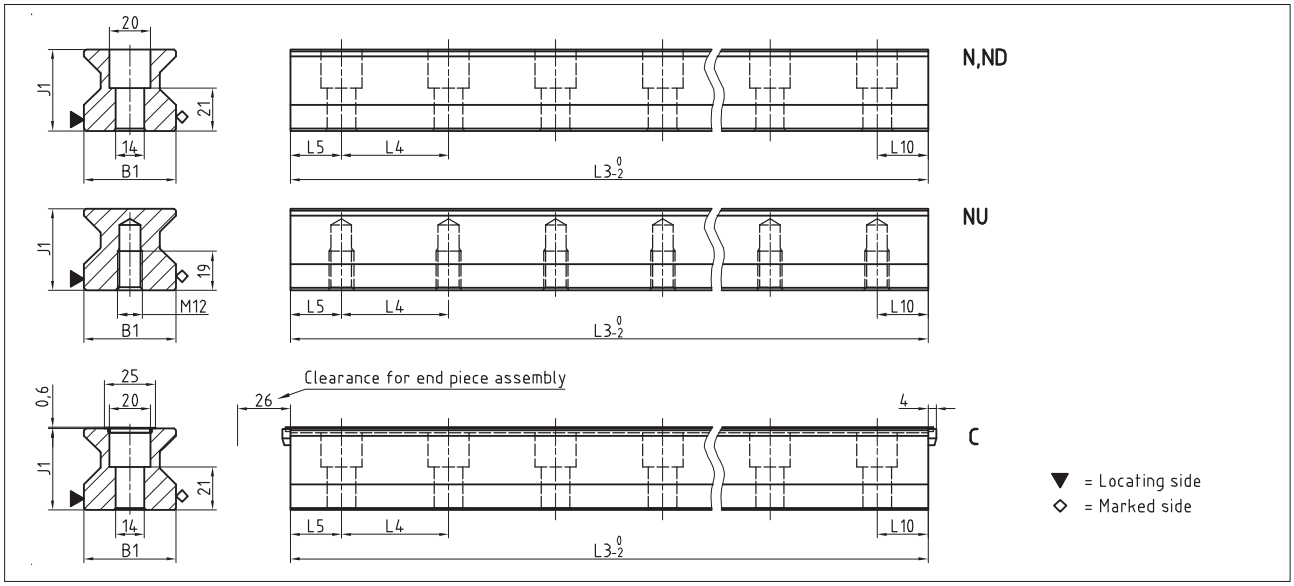

MR W 45 Drawings

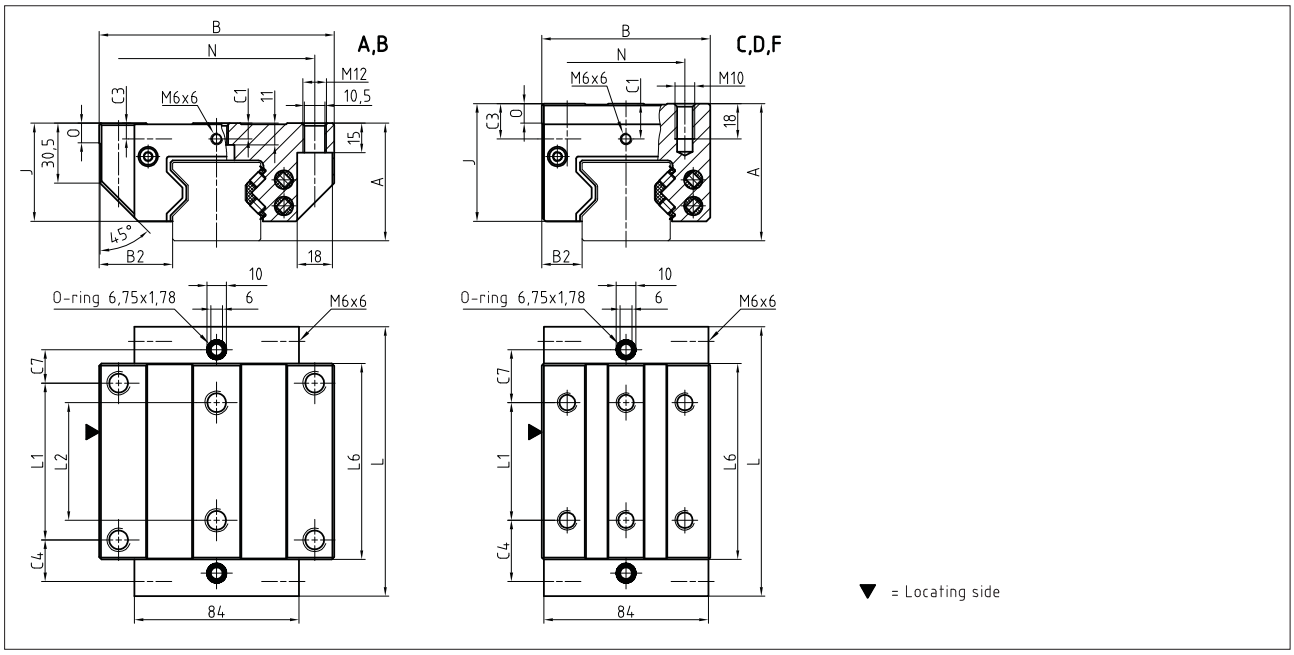

MR W 45 Rigidity diagram

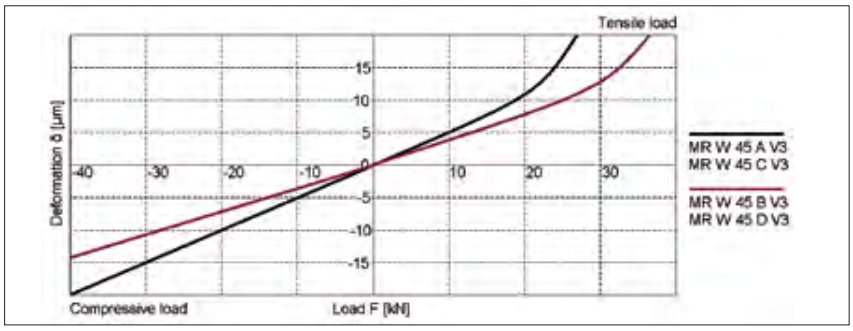

MR W 45 Load rating

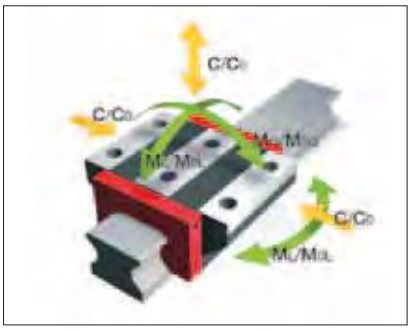

MR S 45 Dimensions




	MR S 45-N	MR S 45-ND	MR S 45-NU	MR S 45-C
B1: Rail width	45	45	45	45
J1: Rail height	40	40	40	40
L3: Rail length max.	6000	1500	6000	6000
L4: Spacing of fixing holes	52.5	52.5	52.5	52.5
L5/L10:Position of first/last fixing hole	25	25	25	25
Gew.: Rail weight, specific (kg/m)	10.8	10.8	11.8	10.6

Available options for MR S 45

MR W 45 Dimensions and capacities





	MR W 45-A	MR W 45-B	MR W 45-C	MR W 45-D	MR W 45-F
A: System height	60	60	70	70	60
B: Carriage width	120	120	86	86	86
B2: Distance between locating faces	37.5	37.5	20.5	20.5	20.5
C1: Position of center front lube hole	8	8	18	18	8
C3: Position of lateral lube hole	8	8	18	18	8
C4: Position of lateral lube hole	21.25	38.75	31.25	38.75	31.25
C7: Position of top lube hole	17	34.5	27	34.5	27
J: Carriage height	50	50	60	60	50
L: Carriage length	137.5	172.5	137.5	172.5	137.5
L1: Exterior fixing hole spacing	80	80	60	80	60
L2: Interior fixing hole spacing	60	60	-	-	-
L6: Steel body length	100	135	100	135	100
N: Lateral fixing hole spacing	100	100	60	60	60
O: Reference face height	10	10	10	10	10
Capacities and weights					
C0: Static load capacitiy (N)	167500	229500	167500	229500	167500
C100: Dynamic load capacity (N)	93400	127800	93400	127800	93400
M0Q: Static cross moment capacity (Nm)	4621	6333	4621	6333	4621
M0L: Static longitud. moment capacity (Nm)	2790	5161	2790	5161	2790
MQ: Dyn. cross moment capacity (Nm)	2577	3527	2577	3527	2577
ML: Dyn. longitud. moment capacity (Nm)	1556	2874	1556	2874	1556
Gew.: Carriage weight (kg)	3.2	4.3	3.0	4.0	2.3

Available options for MR W 45

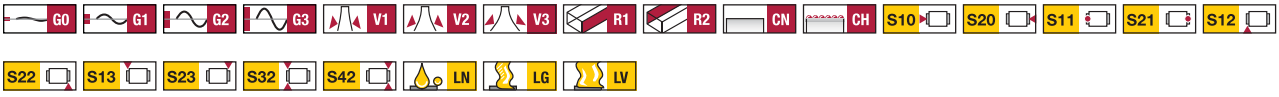

MR S 55 Drawings

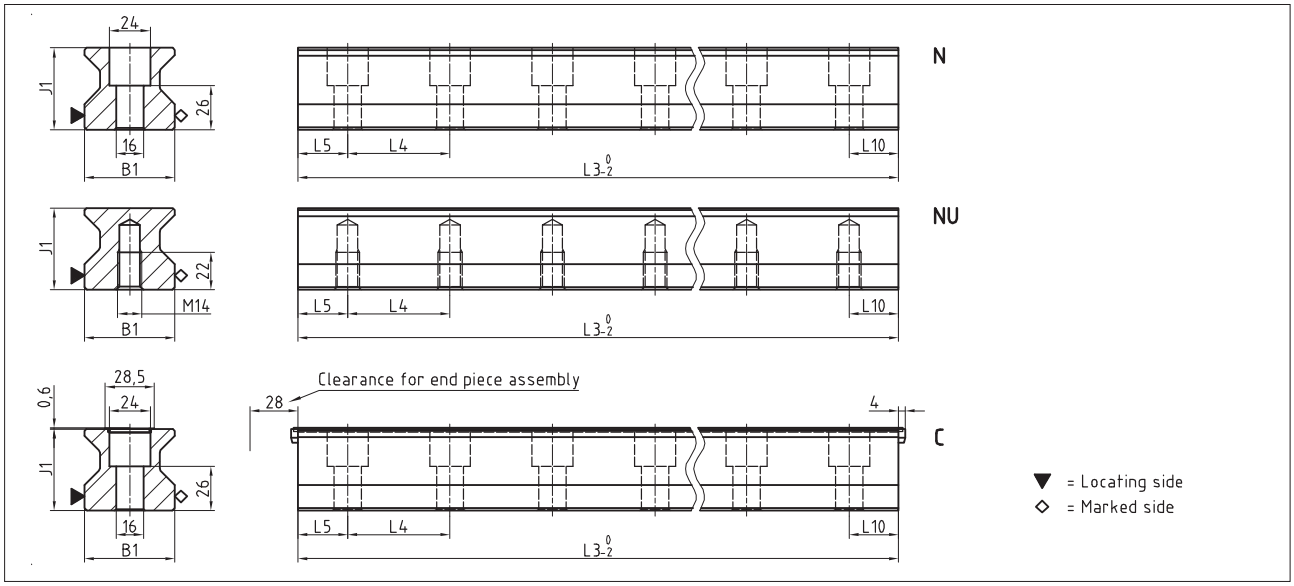

MR W 55 Drawings

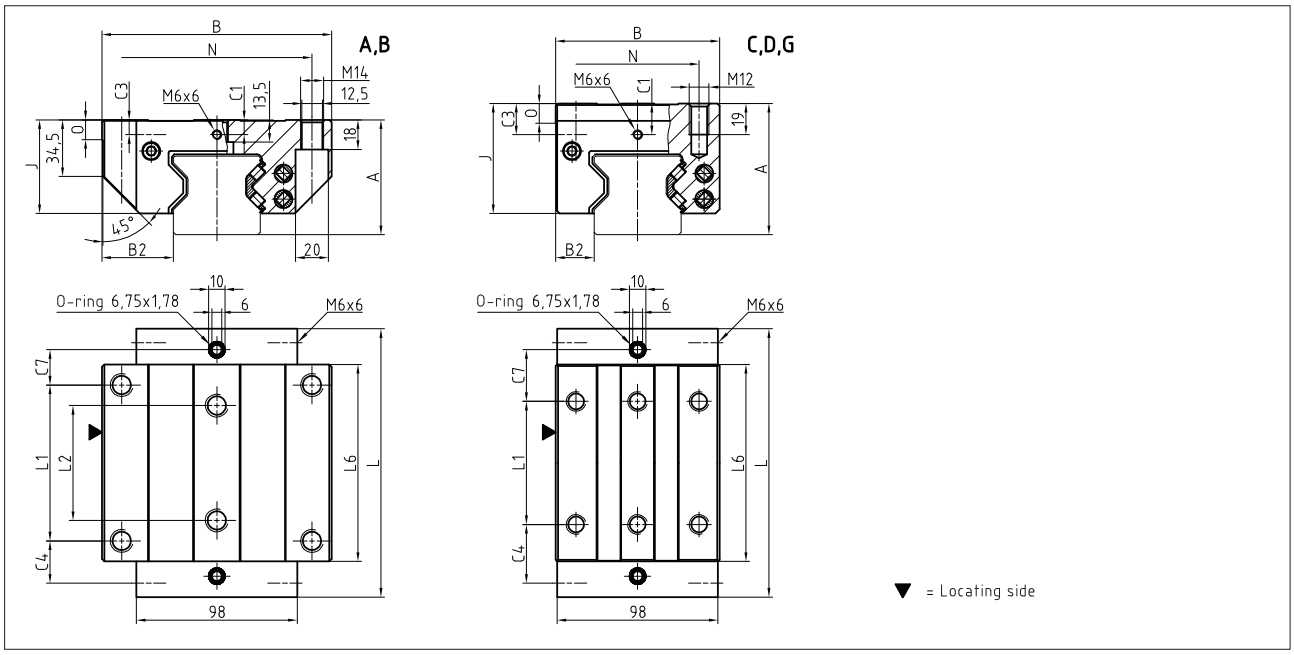

MR W 55 Rigidity diagram

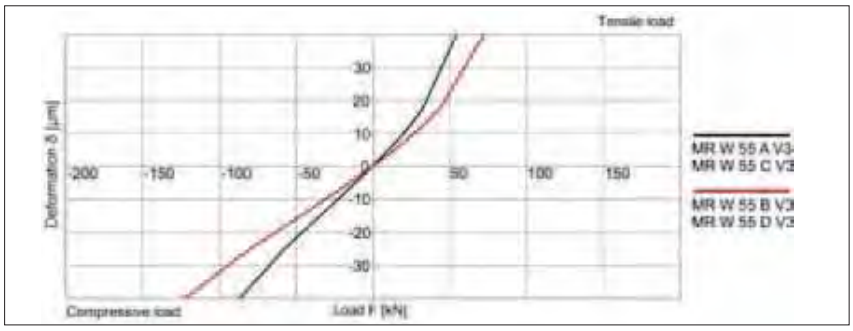

MR W 55 Load rating

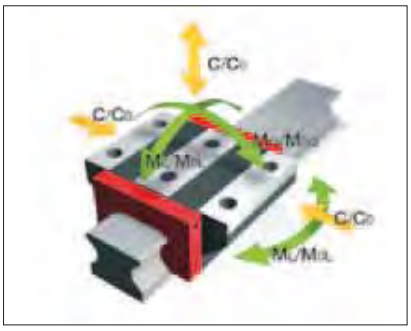

MR S 55 Dimensions



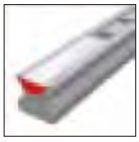

	MR S 55-N	MR S 55-NU	MR S 55-C				
B1: Rail width	53	53	53				
J1: Rail height	48	48	48				
L3: Rail length max.	6000	6000	6000				
L4: Spacing of fixing holes	60	60	60				
L5/L10: Position of first/last fixing hole	28.5	28.5	28.5				
Gew.: Rail weight, specific (kg/m)	15.2	16.6	14.9				

Available options for MR S 55

MR W 55 Dimensions and capacities





	MR W 55-A	MR W 55-B	MR W 55-C	MR W 55-D	MR W 55-G		
A: System height	70	70	80	80	70		
B: Carriage width	140	140	100	100	100		
B2: Distance between locating faces	43.5	43.5	23.5	23.5	23.5		
C1: Position of center front lube hole	9	9	19	19	9		
C3: Position of lateral lube hole	9	9	19	19	9		
C4: Position of lateral lube hole	25.75	46.75	35.75	46.75	46.75		
C7: Position of top lube hole	21.5	42.5	31.5	42.5	42.5		
J: Carriage height	57	57	67	67	57		
L: Carriage length	163.5	205.5	163.5	205.5	205.5		
L1: Exterior fixing hole spacing	95	95	75	95	95		
L2: Interior fixing hole spacing	70	70	-	-	-		
L6: Steel body length	120	162	120	162	162		
N: Lateral fixing hole spacing	116	116	75	75	75		
O: Reference face height	12	12	12	12	12		
Capacities and weights							
C0: Static load capacitiy (N)	237000	324000	237000	324000	324000		
C100: Dynamic load capacity (N)	131900	180500	131900	180500	180500		
M0Q: Static cross moment capacity (Nm)	7771	10624	7771	10624	10624		
M0L: Static longitud. moment capacity (Nm)	4738	8745	4738	8745	8745		
MQ: Dyn. cross moment capacity (Nm)	4325	5919	4325	5919	5919		
ML: Dyn. longitud. moment capacity (Nm)	2637	4872	2637	4872	4872		
Gew: Carriage weight (kg)	5.0	6.8	4.5	6.1	4.8		

Available options for MR W 55

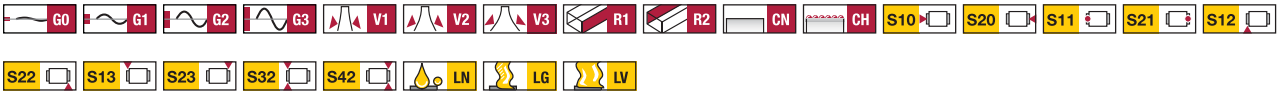

MR S 65 Drawings

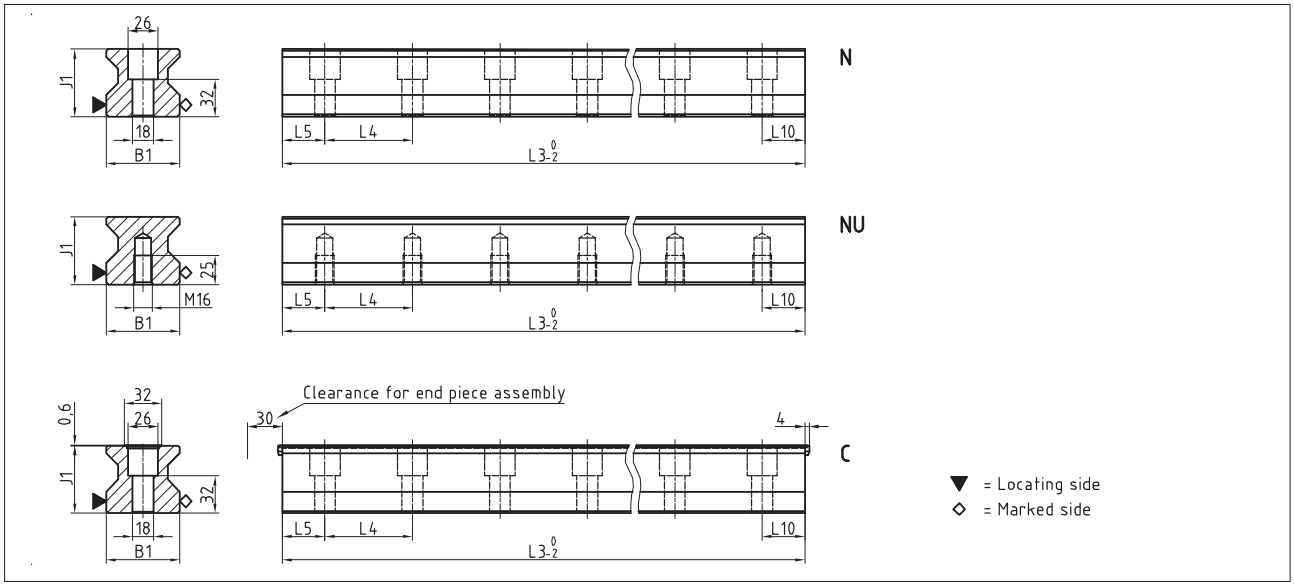

MR W 65 Drawings

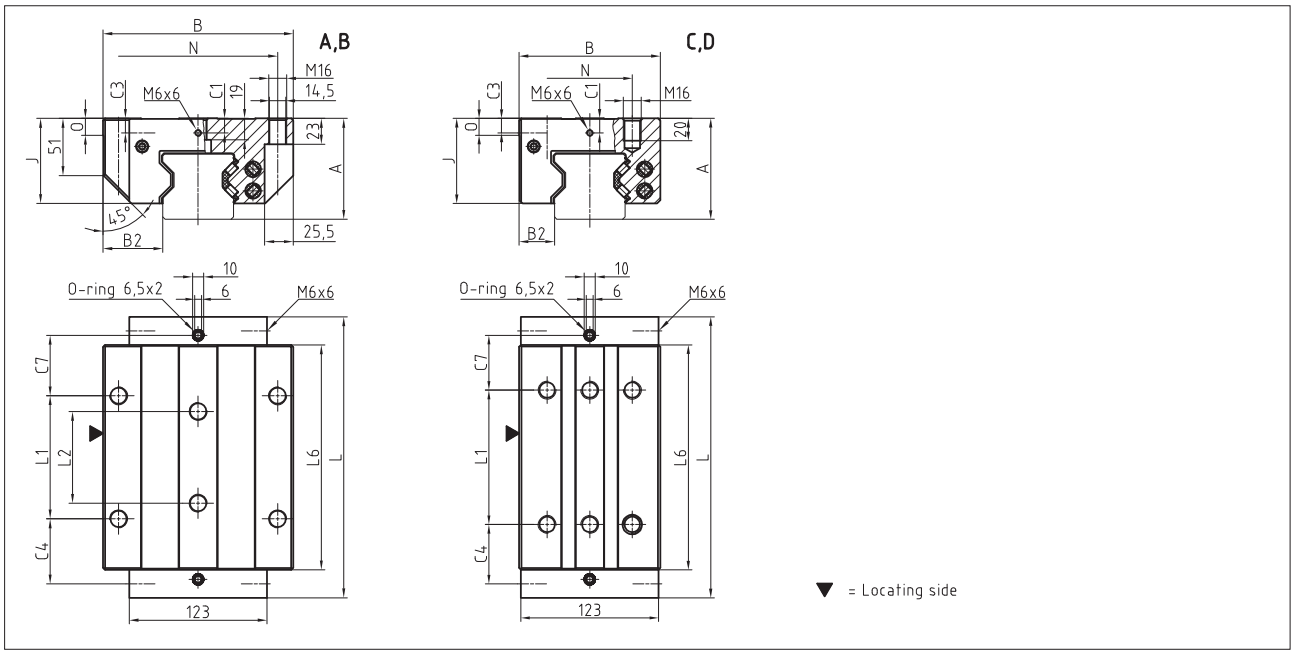

MR W 65 Rigidity diagram

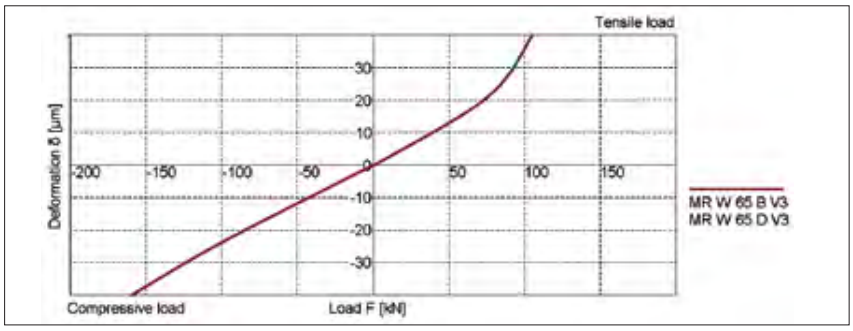

MR W 65 Load rating

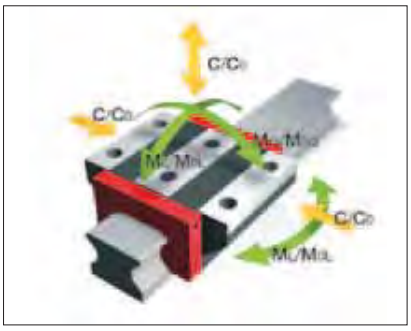

MR S 65 Dimensions



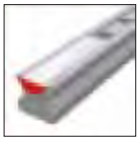

	MR S 65-N	MR S 65-NU	MR S 65-C
B1: Rail width	63	63	63
J1: Rail height	58	58	58
L3: Rail length max.	6000	6000	6000
L4: Spacing of fixing holes	75	75	75
L5/L10: Position of first/last fixing hole	36	36	36
Gew.: Rail weight, specific (kg/m)	22.8	24.5	22.5

Available options for MR S 65

MR W 65 Dimensions and capacities




	MR W 65-A	MR W 65-B	MR W 65-C	MR W 65-D
A: System height	90	90	90	90
B: Carriage width	170	170	126	126
B2: Distance between locating faces	53.5	53.5	31.5	31.5
C1: Position of center front lube hole	13	13	13	13
C3: Position of lateral lube hole	13	13	13	13
C4: Position of lateral lube hole	31.75	58	51.75	53
C7: Position of top lube hole	27.75	54	47.75	49
J: Carriage height	76	76	76	76
L: Carriage length	198.5	251	198.5	251
L1: Exterior fixing hole spacing	110	110	70	120
L2: Interior fixing hole spacing	82	82	-	-
L6: Steel body length	148.5	201	148.5	201
N: Lateral fixing hole spacing	142	142	76	76
O: Reference face height	15	15	15	15
Capacities and weights				
C0: Static load capacitiy (N)	419000	530000	419000	530000
C100: Dynamic load capacity (N)	232000	295000	232000	295000
M0Q: Static cross moment capacity (Nm)	16446	20912	16446	20912
M0L: Static longitud. moment capacity (Nm)	10754	17930	10754	17930
MQ: Dyn. cross moment capacity (Nm)	9154	11640	9154	11640
ML: Dyn. longitud. moment capacity (Nm)	5954	9980	5954	9980
Gew: Carriage weight (kg)	10.2	13.5	8.0	10.4

Available options for MR W 65

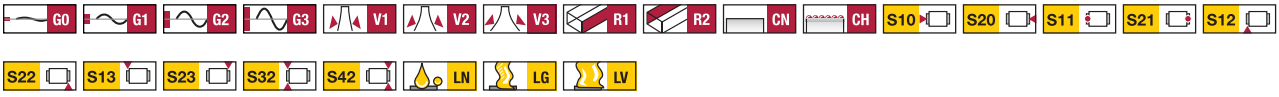

MR S 100 Drawings

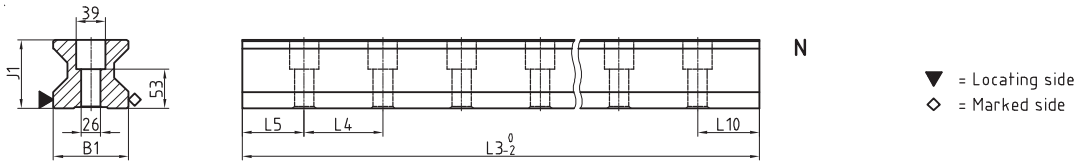

MR W 100 Drawings

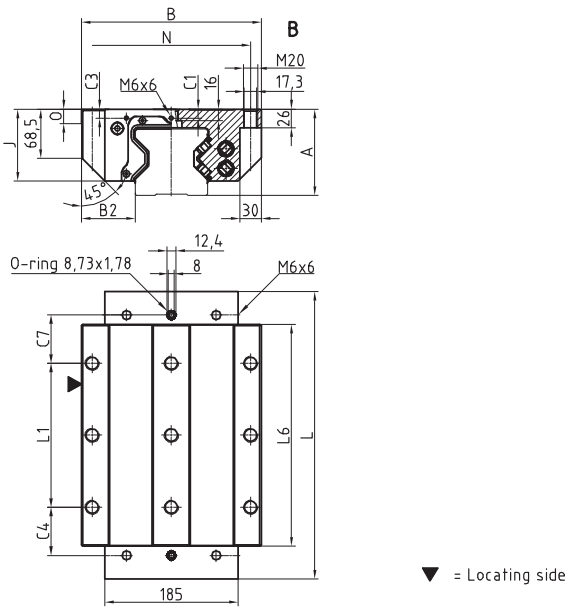

MR W 100 Rigidity diagram

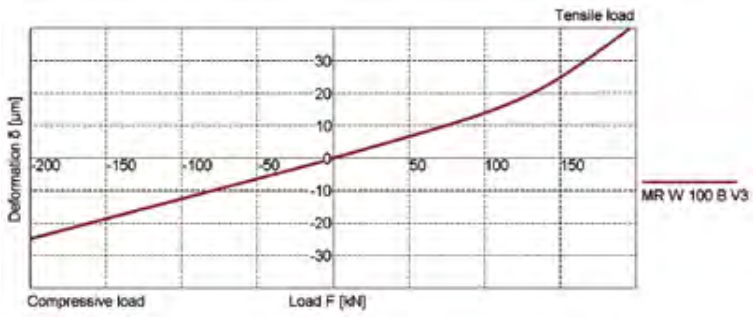

MR W 100 Load rating

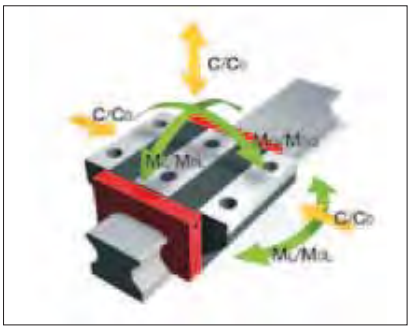

MR S 100 Dimensions

	MR S 100-N					
B1: Rail width	100					
J1: Rail height	92					
L3: Rail length max.	3000					
L4: Spacing of fixing holes	105					
L5/L10: Position of first/last fixing hole	51					
Gew.: Rail weight, specific (kg/m)	55.0					

Available options for MR S 100

MR W 100 Dimensions and capacities

	MR W 100-B					
A: System height	120					
B: Carriage width	250					
B2: Distance between locating faces	75					
C1: Position of center front lube hole	12.5					
C3: Position of lateral lube hole	12.5					
C4: Position of lateral lube hole	67					
C7: Position of top lube hole	67					
J: Carriage height	100					
L: Carriage length	400					
L1: Exterior fixing hole spacing	200					
L2: Interior fixing hole spacing	-					
L6: Steel body length	308					
N: Lateral fixing hole spacing	220					
O: Reference face height	20					
Capacities and weights						
C0: Static load capacitiy (N)	1470000					
C100: Dynamic load capacity (N)	60500					
M0Q: Static cross moment capacity (Nm)	91471					
M0L: Static longitud. moment capacity (Nm)	39432					
MQ: Dyn. cross moment capacity (Nm)	37646					
ML: Dyn. longitud. moment capacity (Nm)	16229					
Gew: Carriage weight (kg)	40.0					

Available options for MR W 100

MR Rails accessories overview

Accessories	MR S 25	MR S 35	MR S 45	MR S 55	MR S 65	MR S 100
Plugs:						
Plastic plugs	MRK 25	MRK 35	MRK 45	MRK 55	MRK 65	-
Brass plugs	MRS 25	MRS 35	MRS 45	MRS 55	MRS 65	MRS 100
Steel plugs	MRZ 25	MRZ 35	MRZ 45	MRZ 55	MRZ 65	MRZ 100
Cover strips:						
Cover strip (spare part)	MAC 25	MAC 35	MAC 45	MAC 55	MAC 65	-
Securing band for cover strip (spare part)	BSC 25-MAC	BSC 35-MAC	BSC 45-MAC	BSC 55-MAC	BSC 65-MAC	-
End piece for cover strip (spare part)	EST 25-MAC	EST 35-MAC	EST 45-MAC	EST 55-MAC	EST 65-MAC	-
Assembly tools:						
Installation tool for steel plugs	MWH 25	MWH 35	MWH 45	MWH 55	MWH 65	MWH 100
Hydraulic cylinder for MWH	MZH	MZH	MZH	MZH	MZH	MZH
Installation tool for cover strip	MWC 25	MWC 35	MWC 45	MWC 55	MWC 65	-

MR Carriages accessories overview

Accessories	MR W 25	MR W 35	MR W 45	MR W 55	MR W 65	MR W 100
Additional wipers:						
Additional wipers NBR	ZCN 25	ZCN 35	ZCN 45	ZCN 55	ZCN 65	ZCN 100
Additional wipers Viton	ZCV 25	ZCV 35	ZCV 45	ZCV 55	ZCV 65	ZCV 100
Metal wiper	ASM 25	ASM 35	ASM 45	ASM 55	ASM 65	ASM 100
Bellows:						
Bellows	FBM 25	FBM 35	FBM 45	FBM 55	FBM 65	-
Adapter plate for bellows (spare part)	ZPL 25	ZPL 35	ZPL 45	ZPL 55	ZPL 65	-
End plate for bellows (spare part)	EPL 25	EPL 35	EPL 45	EPL 55	EPL 65	-
Assembly rails:						
Assembly rail	MRM 25	MRM 35	MRM 45	MRM 55	MRM 65	MRM 100
Lubrication plates:						
Lubrication plate	SPL 25-MR	SPL 35-MR	SPL 45-MR	SPL 55-MR	SPL 65-MR	-
Front plates:						
Front plate (spare part)	STP 25-EK	STP 35-EK	STP 45-EK	STP 55-EK	STP 65-EK	STP 100-EK
Lube nippels:						
Hydraulic-type grease nipple straight	SN 6	SN 6	SN 6	SN 6	SN 6	SN 6
Hydraulic-type grease nipple 45°	SN 6-45	SN 6-45	SN 6-45	SN 6-45	SN 6-45	SN 6-45
Hydraulic-type grease nipple 90°	SN 6-90	SN 6-90	SN 6-90	SN 6-90	SN 6-90	SN 6-90
Flush type grease nipple M6	SN 6-T	SN 6-T	SN 6-T	SN 6-T	SN 6-T	SN 6-T
Grease gun for SN 3-T und SN 6-T	SFP-T3	SFP-T3	SFP-T3	SFP-T3	SFP-T3	SFP-T3
Lube adapters:						
Lubrication adapter M8 round-head	SA 6-RD-M8	SA 6-RD-M8	SA 6-RD-M8	SA 6-RD-M8	SA 6-RD-M8	SA 6-RD-M8
Lubrication adapter M8 hexagon head	-	SA 6-6KT-M8	SA 6-6KT-M8	SA 6-6KT-M8	SA 6-6KT-M8	SA 6-6KT-M8
Lubrication adapter G1/8 hexagon head	-	SA 6-6KT-G1/8	SA 6-6KT-G1/8	SA 6-6KT-G1/8	SA 6-6KT-G1/8	SA 6-6KT-G1/8
Swivel screw connection for pipe d=4 mm	SV 6-D4	SV 6-D4	SV 6-D4	SV 6-D4	SV 6-D4	SV 6-D4
Swivel screw connection M6	SV 6-M6	SV 6-M6	SV 6-M6	SV 6-M6	SV 6-M6	SV 6-M6
Swivel screw connection M6 long	SV 6-M6-L	SV 6-M6-L	SV 6-M6-L	SV 6-M6-L	SV 6-M6-L	SV 6-M6-L
Swivel screw connection M8	SV 6-M8	SV 6-M8	SV 6-M8	SV 6-M8	SV 6-M8	SV 6-M8
Swivel screw connection M8 long	SV 6-M8-L	SV 6-M8-L	SV 6-M8-L	SV 6-M8-L	SV 6-M8-L	SV 6-M8-L

MR Rails accessory details

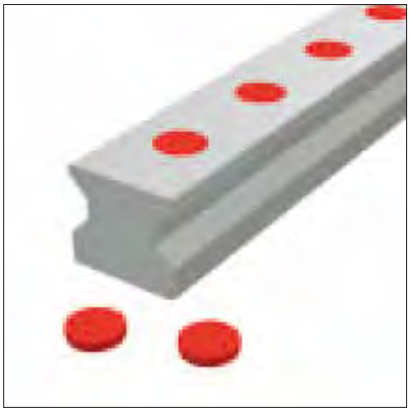

Plastic plugs
MRK plastic plugs are used as a low-cost method of closing off the rail attachment holes. They can be fitted manually with fairly simple tools. Plastic plugs are recommended for use with protected axes or in environments with low levels of contamination, e.g. handling.

Quantity supplied: Pack of 25 pcs.

Order code: **MRK xx**
xx = Size, sample order: 6 x MRK 65

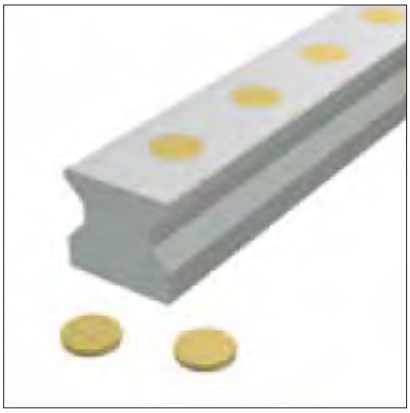

Brass plugs
Brass plugs are used in applications with increased contamination or external temperature influences, e.g., in the case of chip impact or whenever a smooth and gap-free rail surface is required.
A hydraulic MWH fitting tool is recommended for correct installation.

Order code: **MRS xx**
xx = Size, sample order: 48 x MRS 65

Steel plugs
Made of stainless steel, the two-part steel plugs are suitable for applications with greater demands on the mechanical stability of rail surfaces, e.g. when mechanical loads are higher or in open chip spaces. They combine the advantages of simple and very precise installation and a high degree of mechanical stability.

Function:
The clamping ring lies loosely on the screw head in the hole in the rail. When the slightly conical plug is pressed in, the ring is expanded to establish a positive frictional connection between the plug and the hole in the rail.
When fitted, the plug is flush with the rail surface where it ensures that the wipers operate to the optimum degree and have an optimum service life.
A hydraulic MWH fitting tool is necessary for correct installation.

Order code: **MRZ xx**
xx = Size, sample order: 48 x MRZ 65

MR Rails accessory details

Cover strip (spare part)
A SCHNEEBERGER MAC cover strip combines technical functionality with simple handling and neat appearance. Made of stainless spring steel, the strip is suitable for demading applications with increased contamination or external temperature influences.

- It provides the following advantages:
- Reliable fixing along the length as it is clipped into a special groove
- Additional fixing of the ends of the strips using locking parts (EST xx-MAC)
- Very robust thanks to the substantial thickness of the material
- The strip free top surface of the rail can be used to support covers
- Can be fitted and removed several times
- Protection of the wipers during installation as the rail holes are recessed in the groove
- Available in any length up to 30m

When ordering guide rails with cover strips, they are included in the scope of supply.

Order code: **MAC xx-yy**
xx = Size, yy = Rail length in mm, sample order: 1 x MAC 65-4320

End piece for cover strip (spare part)
EST end pieces are used to close the ends of MAC cover strips. To do this, these plastic parts are inserted on both ends of the rail into the gap under the cover strip. Their special design prevents the ends of the cover strip from lifting and reduces the danger of injury on the sharp edges of the cover strip.

Order code: **EST xx-MAC**
xx = Size, sample order: 2 x EST 65-MAC

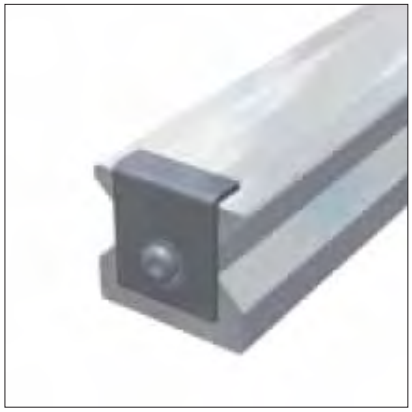

Securing band for cover strip (spare part)
The BSC securing band for cover strips is used to secure the ends when mechanical loads are high. To do this, the protruding band ends are cut off at right angles and burr-free, and a fastening thread is fitted to the front face of the rail.
Securing bands are used in applications with high vibration levels, with rails in open chip spaces, with rail lengths of less than 600 mm or for vertical fitting and the subsequent risk that EST endpieces could fall out.
The securing band also covers the ends of the cover strips and reduces the risk of injury on the sharp corners of the ends.

Order code: **BSC xx-MAC**
xx = Size, order example: 2 x BSC 65-MAC

MR Rails accessory details

Installation tool for cover strip
An MWH fitting tool is used to insert MRZ two-part steel plugs hydraulically. It consists of a specially sized shoe and insertion ram. The fitting tool also requires an MZH hydraulic cylinder. For assembly the shoe and the insertion ram must be screwed to the hydraulic cylinder.

Order code: **MWH xx**
xx = Size, sample order: 1 x MWH 35

Installation tool for steel plugs
An MZH hydraulic cylinder is a single-action block cylinder used to create the required insertion force. A standard hydraulic unit that provides the pressure required for the insertion process is connected to the 1/4“ threaded connection. The hydraulic cylinder fits all sizes of MWH fitting tool and must be ordered separately.

Order code: **MZH**
Sample order: 1 x MZH

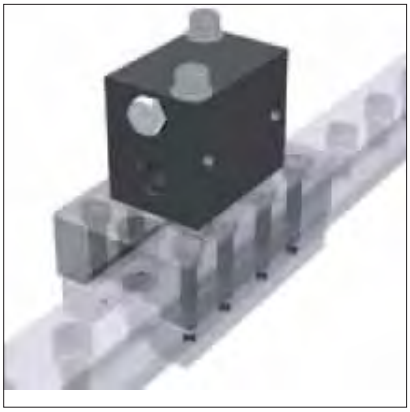

Hydraulic cylinder for MWH
An MZH hydraulic cylinder is a single-action block cylinder used to create the required insertion force. A standard hydraulic unit that provides the pressure required for the insertion process is connected to the 1/4“ threaded connection. The hydraulic cylinder fits all sizes of MWH fitting tool and must be ordered separately.

Order code: **MZH**
Sample order: 1 x MZH

MR Carriages accessory details

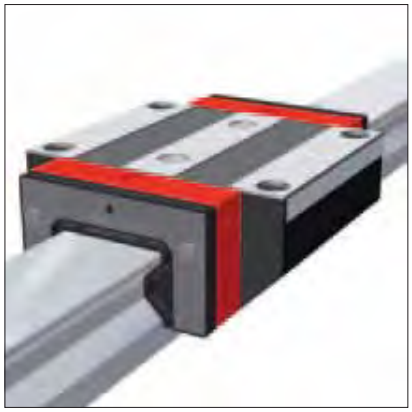

Additional wiper NBR
ZCN nitrile wipers provide additional protection of the carriages in heavily contaminated environments. Thanks to their flexibility, they can be fitted directly over the rail cross section. ZCN wipers can also be used in combination with ASM metal wipers.

Order code: **ZCN xx**
xx = Size, sample order: 2 x ZCN 65

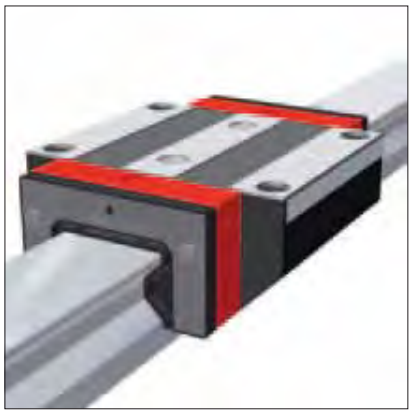

Additional wiper Viton
Like ZCN wipers, ZCV additional wipers provide extra protection of the carriages in heavily contaminated environments. Made of Viton® (fluoroelastomer), they are suitable for use with aggressive coolants.
As their flexibility allows them to be pushed over the rail cross section, retrofitting is possible without the need to remove the carriage from the rail. ZCV wipers can also be used in combination with ASM metal wipers.

Order code: **ZCV xx**
xx = Size, sample order: 2 x ZCV 65

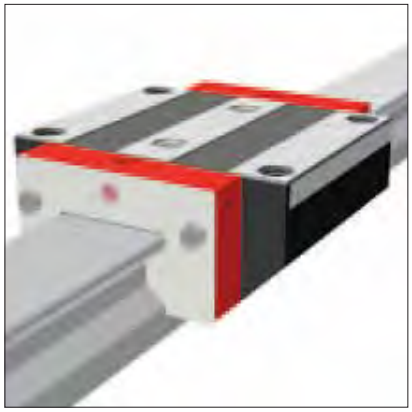

Metal wiper
Made of stainless steel, ASM metal wipers are used to protect the sealing lips of carriages and additional wipers against hot metal chips. Large and loose dirt particles are pushed away and cannot get jammed due to the controlled dimension of the gap with the rail. Specially adapted types are available for rails using AMS measuring systems. Metal wipers are ideally used in combination with ZCN/ZCV additional wipers.

Order code: **ASM xx**
xx= Size, sample order: 1 x ASM 65

MR Carriages accessory details

Bellows
Standard bellows are available for MONORAIL sizes MR 25 – MR 65, the purpose of which is to provide additional protection against dust and water splashes. The bellows are made of synthetic fabric coated on both sides with plastic. The bellows cover the entire length of the rail and their cross section matches the faceplate of the carriage. The external dimensions of the carriage are thus not exceeded by the bellows.
Installation is simple and takes little time. A ZPL adapter plate is required to attach the bellows to the carriage. The adapter plate is screwed to the front plate of the carriage using a central screw. An EPL end plate is screwed to the end face of the rail. The bellows are fastened by two rivets to both the adapter plate and the front plate.
Retrofitting can only be realised with induction hardened rails as the rail ends have to be drilled for the attachment of the EPL end plates.
The required adapter and end plates, the attachment screws and rivet plugs are supplied with each order for a complete set of bellows. The attachment holes for the end plate are also prepared in the rail when a guideway with bellows is ordered.

Order code: **FBM xx-yy**
xx = Size, yy = Number of folds, sample order: 1 x FBM 65-137

Adapter plate for bellows (spare part)
The adapter plate is used to attach the bellows to the carriage and is included with every order for bellows. It is made of black anodized aluminium. On an MR 25 size, the adapter plate is also used for a lateral lubrication connection.

The outer contour of the adapter plate corresponds to that of the carriage front plate, the bellows and the end plate. The central fastening screw is included in the scope of supply.

Order code: **ZPL xx**
XX = Size, sample order: 2 x ZPL 65

End plate for bellows (spare part)
Made of black anodized aluminium, the end plate is used to attach the bellows to the end of the rail. It is included with every order for a set of bellows.
The attaching holes must be drilled in the rail if the bellows are to be retrofitted. For this reason, we recommend the use of induction-hardened rails for retrofits.
The external dimensions of the end plate correspond to that of the carriage front plate, the bellows and the adapter plate. Both fastening screws are supplied with the end plate.

Order code: **EPL xx**
xx = Size, sample order: 2 x EPL 65

MR Carriages accessory details

Assembly rail
The assembly rail is required when a carriage has to be removed from the rail and then reinstalled during the installation of the MONORAIL.
It is advisable to leave the assembly rail in the carriage to protect the rollers against contamination.
If necessary, the two internal carriage attaching screws can be fitted and tightened through the two holes in the assembly rail.

Order code: **MRM xx**
xx = Size, sample order: 1 x MRM 65

Lubrication plate
An SPL lubrication plate is used wherever long lubrication intervals are required. Thanks to its integral oil reservoir, the rolling elements are supplied with an automatic and uniform supply of lubrication over an extended period.
It is ideally used in dry and clean environments as in handling technology or on the ancillary axes of machine tools.

The advantages are:
- Assured supply of lubrication in any installation position
- Long lubrication intervals of up to 5,000 km or 12 months according to use
- Refill apertures closed with screws
- Reduced outlay on lubrication and accessories
- Low environmental impact thanks to minimum consumption of lubricant
- Wipers have a long service life as oil is also supplied to the top surface of the rail

For maximum travel distances without re-lubrication, the lubrication plates are always used in pairs and the carriages are given an additional filling of grease.
The lubrication plates have the same dimensions as the carriage front plates and are installed in front of these. Retrofitting is possible.
Additional ZBN-U/ZBV-U wipers must be provided in applications in which particles of dirt can come into contact with the guideways.

Order code: **SPL xx-MR**
xx = Size, sample order: 2 x SPL 65-MR

Front plate (spare part)
The red front plates have two essential functions:
- To supply lubricant
- To seal a MONORAIL carriage

Lubrication can be supplied to the carriages through several integrated lubrication connection ports. Lubrication channels inside the front plate directly distribute the lubrication to the rollers.
Integral twin-lip cross wipers seal the carriage at the ends and prevent the ingress of dirt and the loss of lubrication. Because the cross wipers are subject to wear, the front plates have to be examined regularly and if necessary replaced.

Order code: STP xx-EK
xx = Size, sample order: 1 x STP 65-EK

3.4 Order key

Individual guide rails and carriages are ordered in accordance with the order codes described below.
Q.v. chapter 2.1 and chapter 3.3 for the order key for accessories.
Separate order codes are used in each case for rails, carriages and accessories. This also applies to different versions of rails and carriages.
All guide components are supplied individually as standard, i.e. unassembled.
If required, SCHNEEBERGER can also supply rails and carriages assembled incl. accessories as complete systems. Please note the ordering instructions in chapter 2.4 if this applies.

Order code for MR Rails

	2x	MR S	35	-N	-G1	-KC	-R1	-918	-19	-19	-CN
Quantity											
Rail											
Size											
Type											
Accuracy											
Straightness											
Reference side											
Rail length L3											
Position of first fixing hole L5											
Position of last fixing hole L10											
Coating											

NB

Q.v. chapter 3.1 to 3.3 for an overview of types, details of shapes, available options and accessories.
Q.v. chapter 2 for a description of the options.
If possible, standard lengths are preferred for L3 rail length.
These are calculated with the table values in chapter 3.2 using the following formula: $L3 = n \times L4 + L5 + L10 \leqslant L3max$.

Order code for MR Carriages

	4x	MR W	35	-A	-G1	-V3	-R1	-CN	-S10	-LN
Quantity										
Carriage										
Size										
Type										
Accuracy										
Preload										
Reference side										
Coating										
Lube connection										
Lubrication as delivered condition										

NB

Q.v. chapter 3.1 to 3.3 for an overview of types, details of shapes, available options and accessories.
Q.v. chapter 2 for a description of the options.

4.0 MONORAIL BM

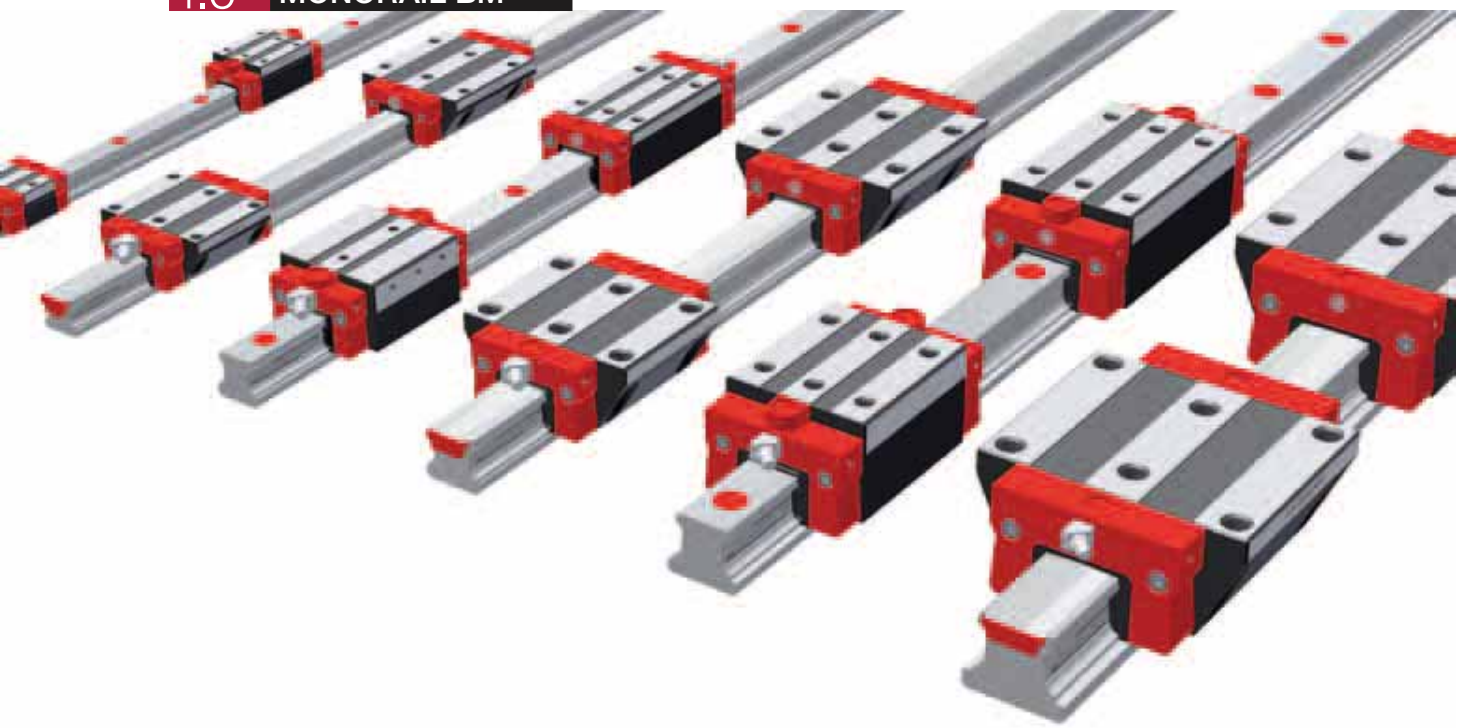

Very good dynamic characteristics and superb economy are the distinguishing features of the MONORAIL BM ball guideway. Thanks to the small number of transitions in the ball tracks, this novel design with its low number of optimally designed components provides outstanding running characteristics, which are distinguished by smooth running, low pulsation, reduced friction values and high travelling speeds.
The trapezoidal rail section guideway results in a highly rigid guideway and also substantially reduces the amount of maintenance required since parts subject to wear can be replaced without the need to dismantle the guideway. Complete sealing of the carriages is a guarantee of unparalleled reliability matched by a long service life. This robust and versatile guideway thus ideally complements the MONORAIL MR roller guideway.

Features of System MONORAIL BM

Details see chapter 1

4.1 Overview of types, sizes and available options

4.2 Technical data and options

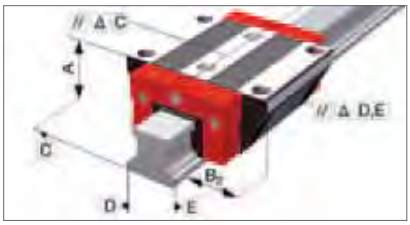

4.3 Accessories MONORAIL BM

4.4 Order key

Product overview BM Rails





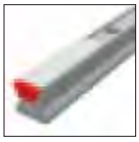
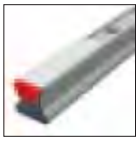

Buildsizes / Rail build forms	**N** standard	**ND** with tapped holes at the bottom	**NXD** standard, half pitch, through hardened	**NU** with tapped holes at the bottom	**C** for cover strip	**CD** for cover strip, through hardened
Size 15		BM S 15-ND	BM S 15-NXD			BM S 15-CD
Size 20	BM S 20-N			BM S 20-NU	BM S 20-C	
Size 25	BM S 25-N			BM S 25-NU	BM S 25-C	
Size 30	BM S 30-N			BM S 30-NU	BM S 30-C	
Size 35	BM S 35-N			BM S 35-NU	BM S 35-C	
Size 45	BM S 45-N			BM S 45-NU	BM S 45-C	
Features						
Screwable from above	●	●	●		●	●
Screwable from below				●		
Small assembly effort				●	●	●
Highly accurate mounting without lateral locating surface			●			
Great single-part system length	●			●	●	
For the support of metal covers		●	●			

Available options for BM Rails

Details see chapter 2

Accuracy

- G0 Highly accurate
- G1 Very accurate
- G2 Accurate
- G3 Standard

Straightness

- KC Standard

Reference side

- R1 Ref. at bottom
- R2 Ref. on top

Coating

- CN None
- CH Hard chromium

Available accessories for MR Rails

Details see chapter 4.3

Plugs

Cover strips

Assembly tools

4.1 Overview of types, sizes and available options BM Carriages

Product overview BM Carriages

Buildsizes / Carriage build forms	A standard	B standard, long	C compact, high	D compact, high, long	E compact, high, for lateral fixation	F compact	G compact, long
Size 15	BM W 15-A		BM W 15-C			BM W 15-F	
Size 20	BM W 20-A	BM W 20-B	BM W 20-C	BM W 20-D			
Size 25	BM W 25-A	BM W 25-B	BM W 25-C	BM W 25-D	BM W 25-E	BM W 25-F	BM W 25-G
Size 30	BM W 30-A	BM W 30-B	BM W 30-C	BM W 30-D	BM W 30-E	BM W 30-F	BM W 30-G
Size 35	BM W 35-A	BM W 35-B	BM W 35-C	BM W 35-D	BM W 35-E	BM W 35-F	BM W 35-G
Size 45	BM W 45-A	BM W 45-B	BM W 45-C	BM W 45-D		BM W 45-F	BM W 45-G
Features							
Screwable from above	●	●	●	●		●	●
Screwable from below	●	●					
Screwable from the side					●		
For high loads and moments		●		●			●
For medium loads and moments	●		●		●	●	
For limited installation space						●	●

Available options for BM Carriages

Details see chapter 2

Accuracy

- G0 Highly accurate
- G1 Very accurate
- G2 Accurate
- G3 Standard

Preload

- V0 very low
- V1 Low
- V2 Mittel
- V3 High

Reference side

- R1 Ref. at bottom
- R2 Ref. on top

Coating

- CN None
- CH Hard chromium

Lube connections

- S10 Left center
- S20 Right center
- S11 Top left
- S21 Top right
- S12 Lower left side
- S22 Lower right side
- S13 Upper left side
- S23 Upper right side
- S32 Left side
- S42 Right side

Lubrication

- LN Oil protect
- LG Grease protect
- LV Full greasing

Available accessories for MR Carriages

Details see chapter 4.3 and 2.1

Additional wipers
Front plates
Bellows
Lube nippels
Assembly rails
Lube adapters
Lubrication plates

BM S 15 Drawings

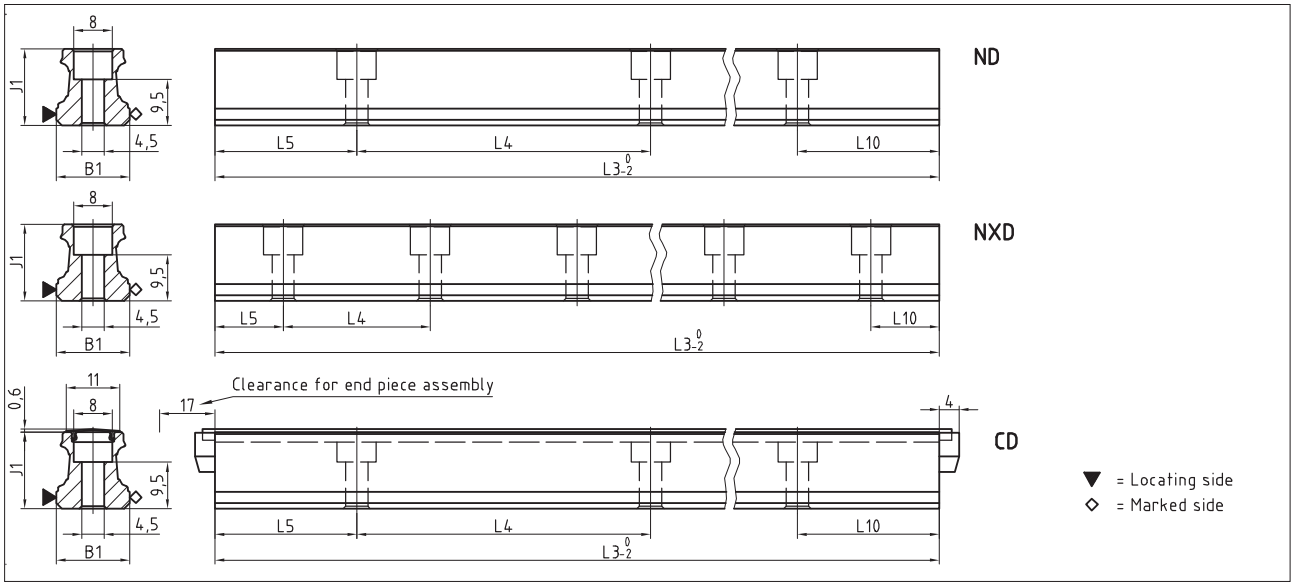

BM W 15 Drawings

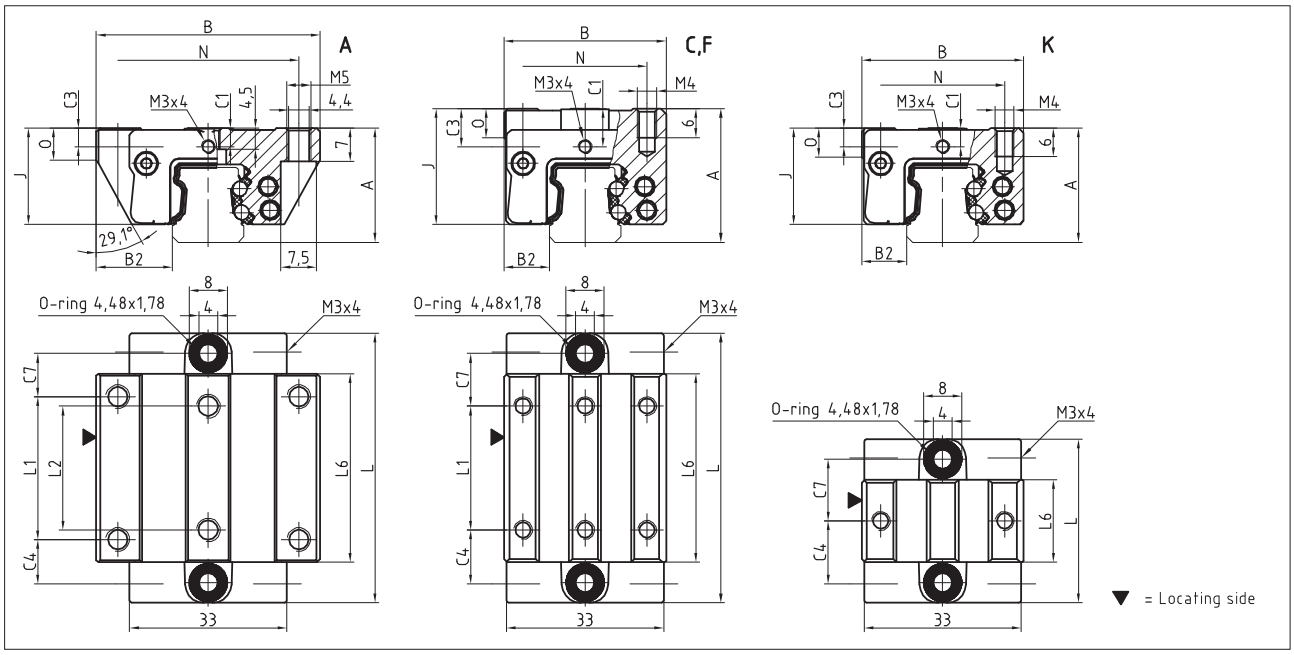

BM W 15 Rigidity diagram

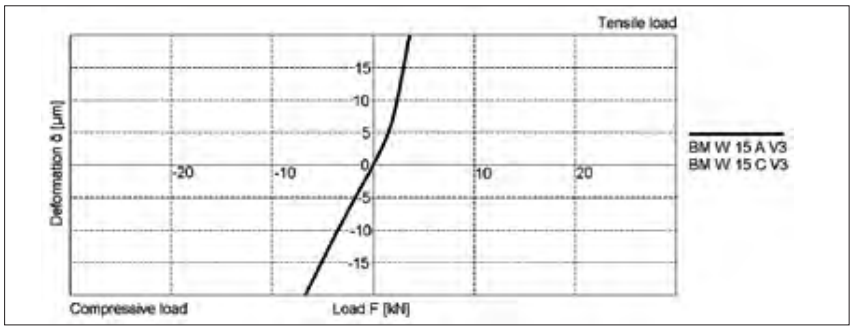

BM W 15 Load rating

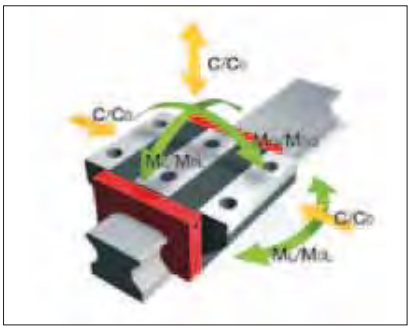

BM S 15 Dimensions



	BM S 15-ND	BM S 15-NXD	BM S 15-CD
B1: Rail width	15	15	15
J1: Rail height	15.7	15.7	15.7
L3: Rail length max.	1500	1500	1500
L4: Spacing of fixing holes	60	30	60
L5/L10: Position of first/last fixing hole	28.5	13.5	28.5
Gew.: Rail weight, specific (kg/m)	1.4	1.4	1.3

Available options for BM S 15

BM W 15 Dimensions and capacities




	BM W 15-A	BM W 15-C	BM W 15-F	BM W 15-K
A: System height	24	28	24	24
B: Carriage width	47	34	34	34
B2: Distance between locating faces	16	9.5	9.5	9.5
C1: Position of center front lube hole	4	8	4	4
C3: Position of lateral lube hole	4	8	4	4
C4: Position of lateral lube hole	9.3	11.3	11.3	14.8
C7: Position of top lube hole	9.05	11.05	11.05	14.55
J: Carriage height	20.2	24.2	20.2	20.2
L: Carriage length	56.6	56.6	56.6	37.6
L1: Exterior fixing hole spacing	30	26	26	-
L2: Interior fixing hole spacing	26	-	-	-
L6: Steel body length	39.6	39.6	39.6	20.6
N: Lateral fixing hole spacing	38	26	26	26
O: Reference face height	7	6	5.5	6
Capacities and weights				
C0: Static load capacitiy (N)	19600	19600	19600	8500
C100: Dynamic load capacity (N)	9000	9000	9000	5200
M0Q: Static cross moment capacity (Nm)	181	181	181	78
M0L: Static longitud. moment capacity (Nm)	146	146	146	30
MQ: Dyn. cross moment capacity (Nm)	83	83	83	48
ML: Dyn. longitud. moment capacity (Nm)	67	67	67	18
Gew: Carriage weight (kg)	0.2	0.3	0.2	0.2

Available options for BM W 15

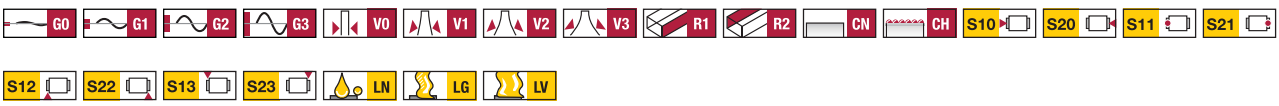

BM S 20 Drawings

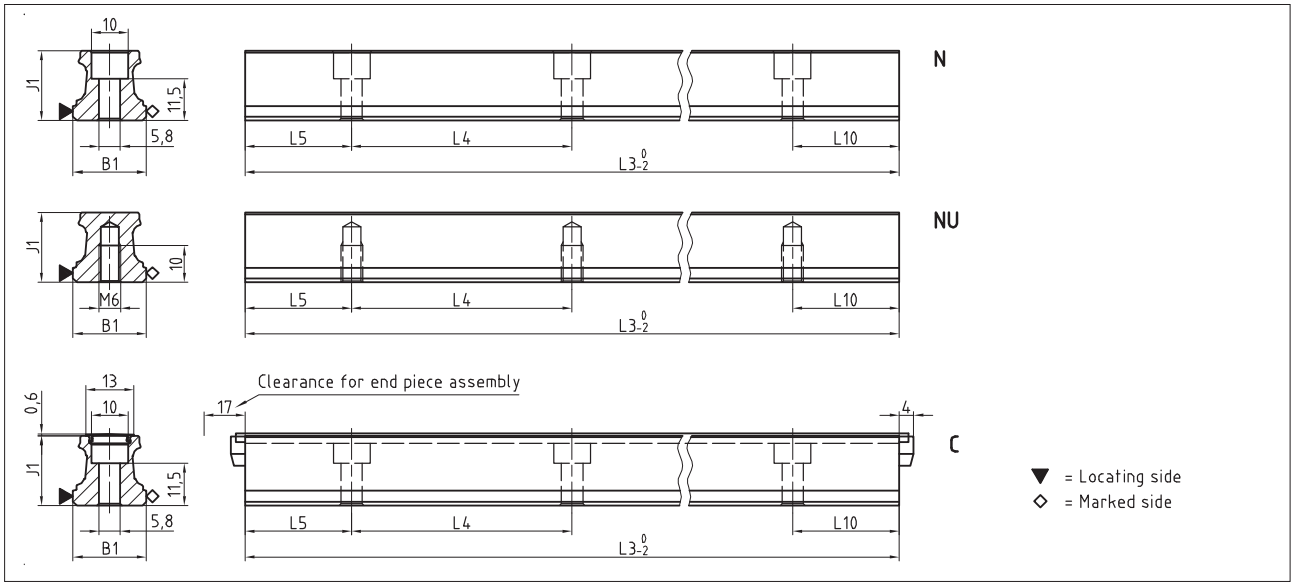

BM W 20 Drawings

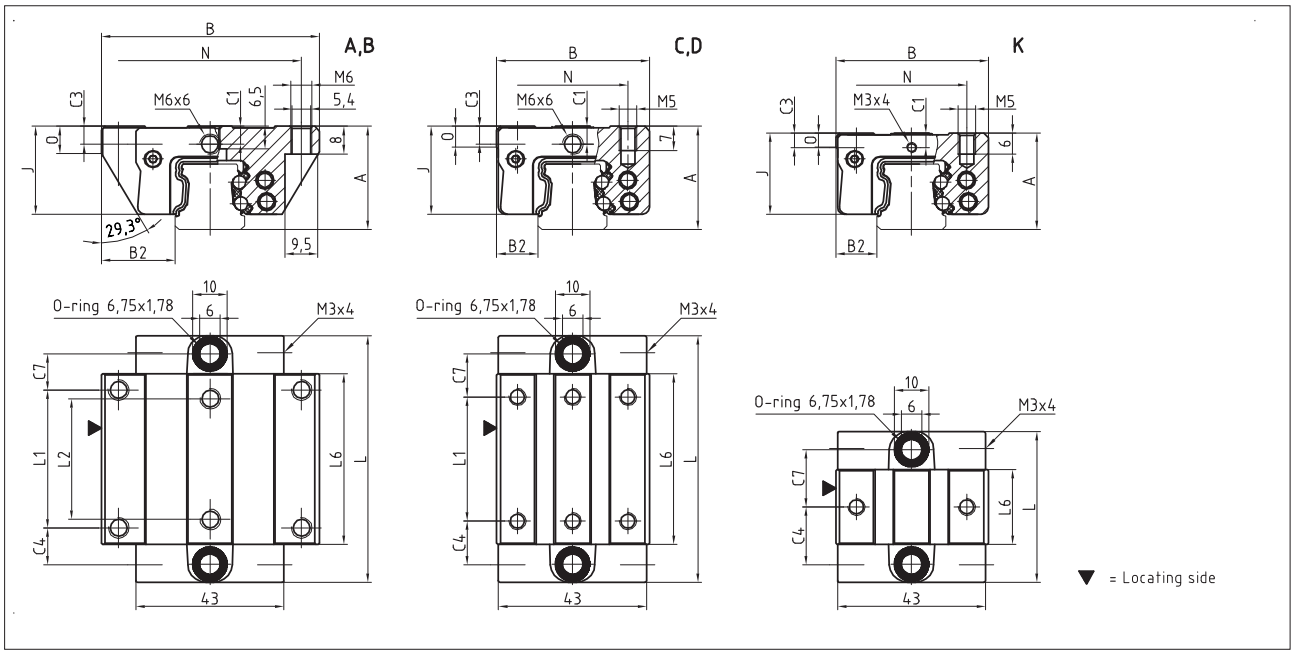

BM W 20 Rigidity diagram

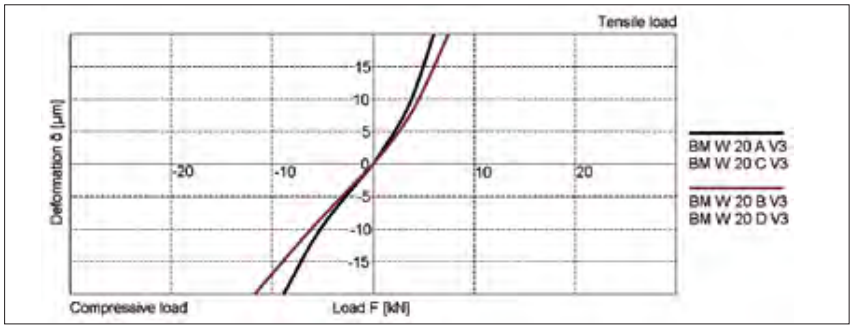

BM W 20 Load rating

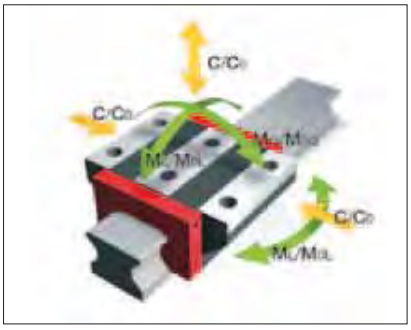

BM S 20 Dimensions



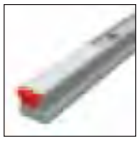

	BM S 20-N	BM S 20-NU	BM S 20-C				
B1: Rail width	20	20	20				
J1: Rail height	19	19	19				
L3: Rail length max.	3000	3000	3000				
L4: Spacing of fixing holes	60	60	60				
L5/L10: Position of first/last fixing hole	28.5	28.5	28.5				
Gew.: Rail weight, specific (kg/m)	2.2	2.3	2.1				

Available options for BM S 20

BM W 20 Dimensions and capacities





	BM W 20-A	BM W 20-B	BM W 20-C	BM W 20-D	BM W 20-K		
A: System height	30	30	30	30	28		
B: Carriage width	63	63	44	44	44		
B2: Distance between locating faces	21.5	21.5	12	12	12		
C1: Position of center front lube hole	5.2	5.2	5.2	5.2	4.2		
C3: Position of lateral lube hole	5.2	5.2	5.2	5.2	4.2		
C4: Position of lateral lube hole	10.75	18.75	12.75	13.75	18.85		
C7: Position of top lube hole	10.25	18.25	12.25	13.25	18.35		
J: Carriage height	25.5	25.5	25.5	25.5	23.5		
L: Carriage length	71.5	87.5	71.5	87.5	47.7		
L1: Exterior fixing hole spacing	40	40	36	50	-		
L2: Interior fixing hole spacing	35	35	-	-	-		
L6: Steel body length	49.5	65.5	49.5	65.5	25.7		
N: Lateral fixing hole spacing	53	53	32	32	32		
O: Reference face height	8	8	6	6	4		
Capacities and weights							
C0: Static load capacitiy (N)	31400	41100	31400	41100	13100		
C100: Dynamic load capacity (N)	14400	17400	14400	17400	8400		
M0Q: Static cross moment capacity (Nm)	373	490	373	490	150		
M0L: Static longitud. moment capacity (Nm)	292	495	292	495	58		
MQ: Dyn. cross moment capacity (Nm)	171	206	171	206	99		
ML: Dyn. longitud. moment capacity (Nm)	134	208	134	208	37		
Gew: Carriage weight (kg)	0.5	0.6	0.4	0.5	0.3		

Available options for BM W 20

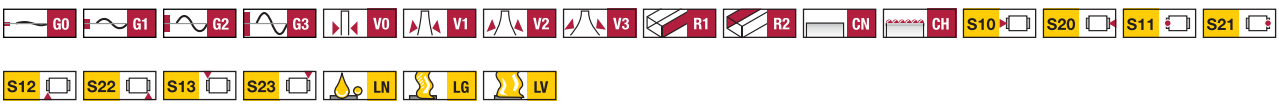

BM S 25 Drawings

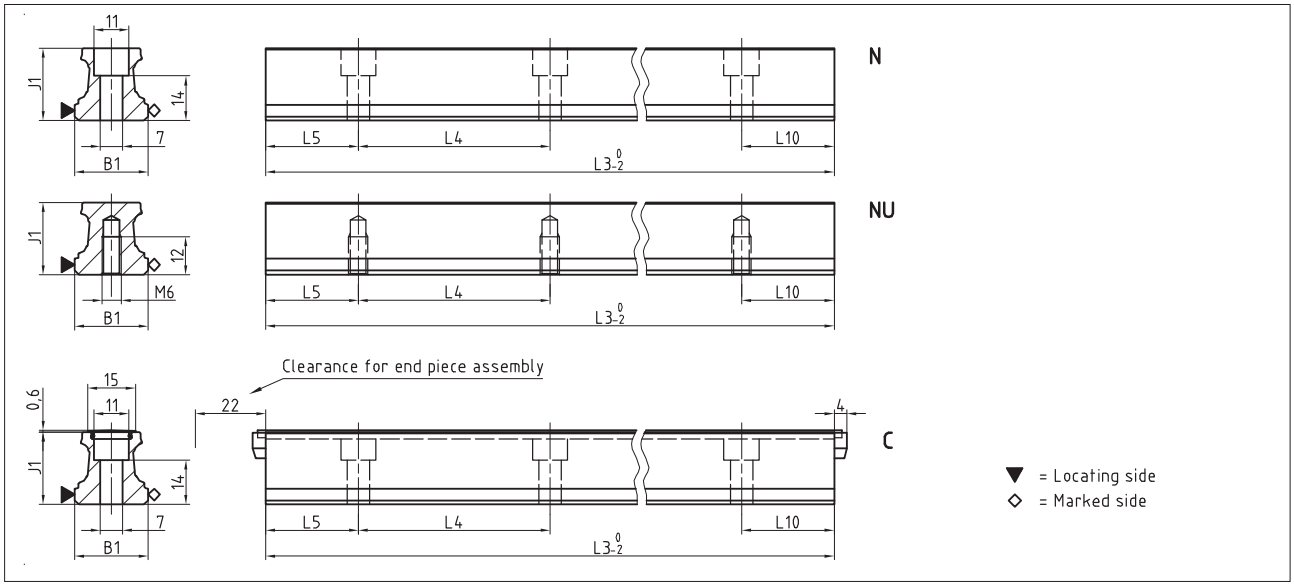

BM W 25 Drawings

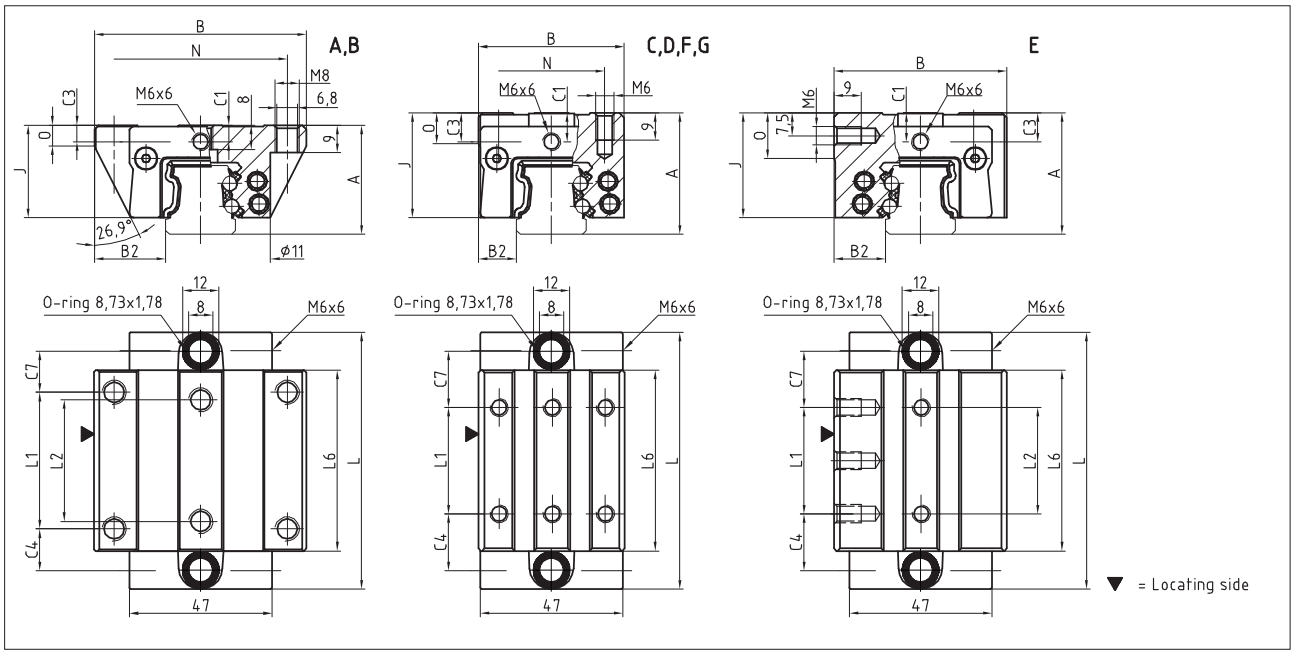

BM W 25 Rigidity diagram

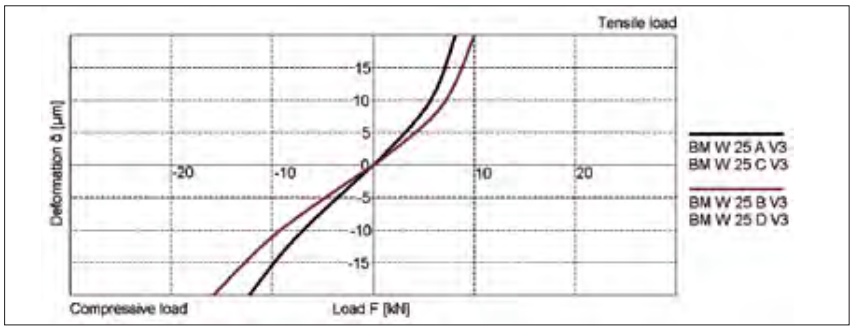

BM W 25 Load rating

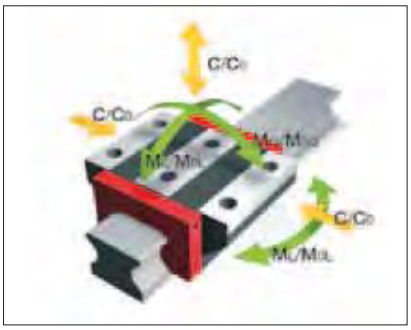

BM S 25 Dimensions



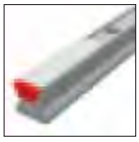

	BM S 25-N	BM S 25-NU	BM S 25-C				
B1: Rail width	23	23	23				
J1: Rail height	22.7	22.7	22.7				
L3: Rail length max.	6000	6000	3000				
L4: Spacing of fixing holes	60	60	60				
L5/L10: Position of first/last fixing hole	28.5	28.5	28.5				
Gew.: Rail weight, specific (kg/m)	3.0	3.1	2.8				

Available options for BM S 25

BM W 25 Dimensions and capacities







	BM W 25-A	BM W 25-B	BM W 25-C	BM W 25-D	BM W 25-E	BM W 25-F	BM W 25-G
A: System height	36	36	40	40	40	36	36
B: Carriage width	70	70	48	48	57	48	48
B2: Distance between locating faces	23.5	23.5	12.5	12.5	17	12.5	12.5
C1: Position of center front lube hole	5.5	5.5	9.5	9.5	9.5	5.5	5.5
C3: Position of lateral lube hole	5.5	5.5	9.5	9.5	9.5	5.5	5.5
C4: Position of lateral lube hole	13.75	23.25	18.75	20.75	18.75	18.75	20.75
C7: Position of top lube hole	13.5	23	18.5	20.5	18.5	18.5	20.5
J: Carriage height	30.5	30.5	34.5	34.5	34.5	30.5	30.5
L: Carriage length	84.5	103.5	84.5	103.5	84.5	84.5	103.5
L1: Exterior fixing hole spacing	45	45	35	50	35	35	50
L2: Interior fixing hole spacing	40	40	-	-	35	-	-
L6: Steel body length	59.5	78.5	59.5	78.5	59.5	59.5	78.5
N: Lateral fixing hole spacing	57	57	35	35	-	35	35
O: Reference face height	7	7	11	11	15	7	7
Capacities and weights							
C0: Static load capacitiy (N)	46100	60300	46100	60300	46100	46100	60300
C100: Dynamic load capacity (N)	21100	25500	21100	25500	21100	21100	25500
M0Q: Static cross moment capacity (Nm)	631	825	631	825	631	631	825
M0L: Static longitud. moment capacity (Nm)	513	863	513	863	513	513	863
MQ: Dyn. cross moment capacity (Nm)	289	349	289	349	289	289	349
ML: Dyn. longitud. moment capacity (Nm)	235	365	235	365	235	235	365
Gew: Carriage weight (kg)	0.7	0.9	0.6	0.8	0.7	0.6	0.7

Available options for BM W 25

BM S 30 Drawings

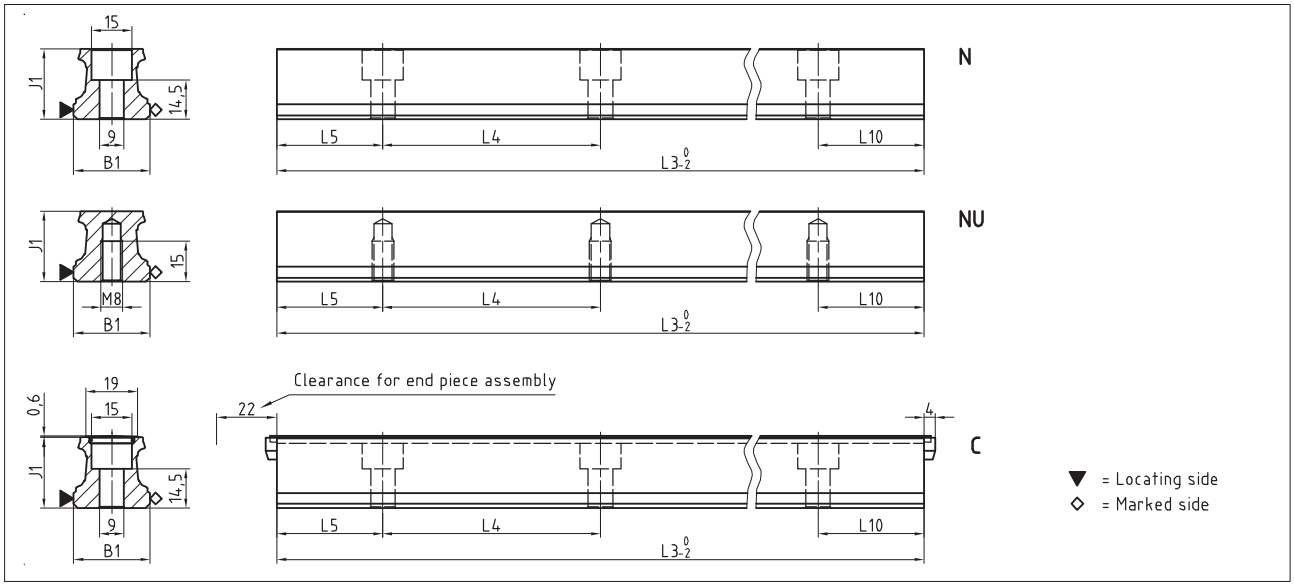

BM W 30 Drawings

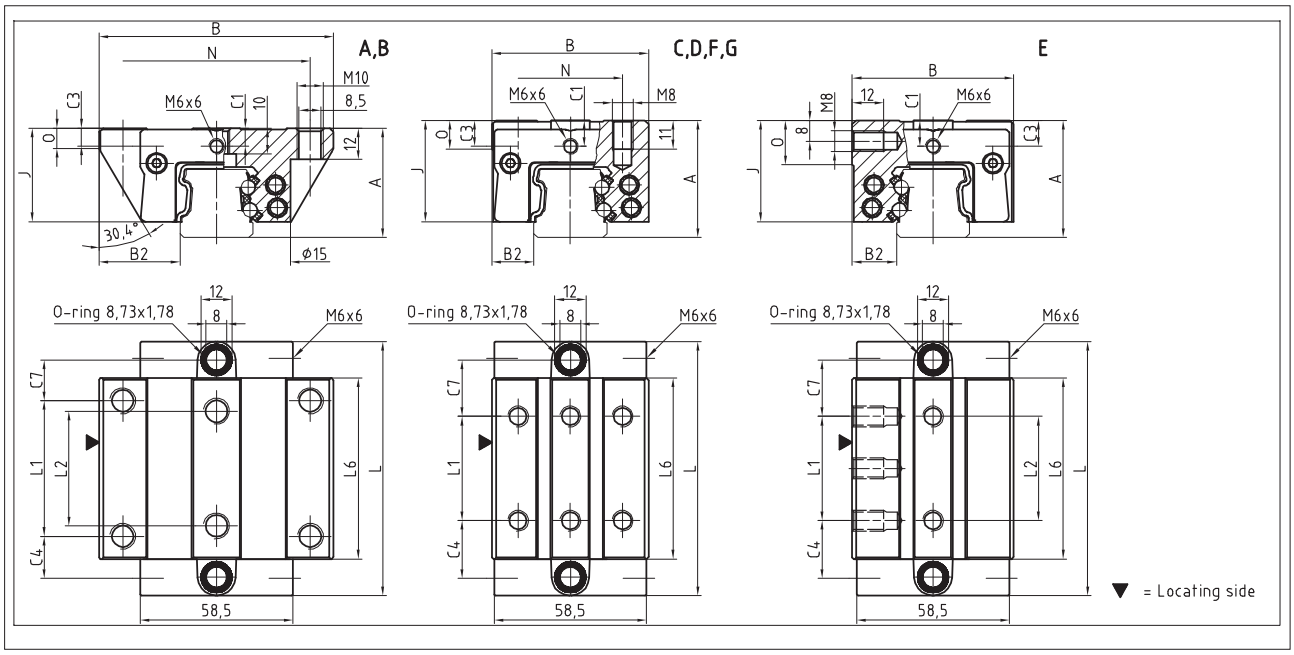

BM W 30 Rigidity diagram

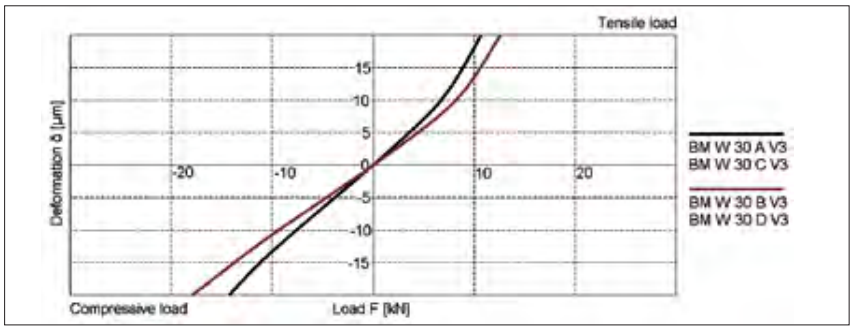

BM W 30 Load rating

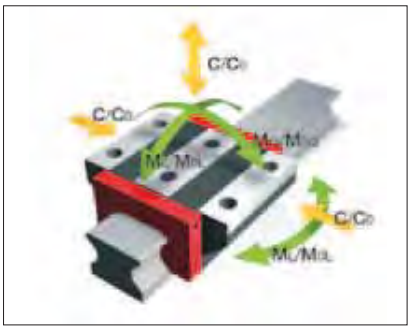

BM S 30 Dimensions



	BM S 30-N	BM S 30-NU	BM S 30-C				
B1: Rail width	28	28	28				
J1: Rail height	26	26	26				
L3: Rail length max.	6000	6000	6000				
L4: Spacing of fixing holes	80	80	80				
L5/L10: Position of first/last fixing hole	38.5	38.5	38.5				
Gew: Rail weight, specific (kg/m)	4.3	4.5	4.1				

Available options for BM S 30

BM W 30 Dimensions and capacities







	BM W 30-A	BM W 30-B	BM W 30-C	BM W 30-D	BM W 30-E	BM W 30-F	BM W 30-G
A: System height	42	42	45	45	45	42	42
B: Carriage width	90	90	60	60	62	60	60
B2: Distance between locating faces	31	31	16	16	17	16	16
C1: Position of center front lube hole	7	7	10	10	10	7	7
C3: Position of lateral lube hole	7	7	10	10	10	7	7
C4: Position of lateral lube hole	16.2	27.2	22.2	23.2	22.2	22.2	23.2
C7: Position of top lube hole	15.7	26.7	21.7	22.7	21.7	21.7	22.7
J: Carriage height	35.9	35.9	38.9	38.9	38.9	35.9	35.9
L: Carriage length	97.4	119.4	97.4	119.4	97.4	97.4	119.4
L1: Exterior fixing hole spacing	52	52	40	60	40	40	60
L2: Interior fixing hole spacing	44	44	-	-	40	-	-
L6: Steel body length	69.4	91.4	69.4	91.4	69.4	69.4	91.4
N: Lateral fixing hole spacing	72.	72	40	40	-	40	40
O: Reference face height	7.8	7.8	11	11	17	8	8
Capacities and weights							
C0: Static load capacitiy (N)	63700	83300	63700	83300	63700	63700	83300
C100: Dynamic load capacity (N)	29200	35300	29200	35300	29200	29200	35300
M0Q: Static cross moment capacity (Nm)	1084	1414	1084	1414	1084	1084	1414
M0L: Static longitud. moment capacity (Nm)	829	1390	829	1390	829	829	1390
MQ: Dyn. cross moment capacity (Nm)	497	599	497	599	497	497	599
ML: Dyn. longitud. moment capacity (Nm)	380	589	380	589	380	380	589
Gew: Carriage weight (kg)	1.2	1.5	1.0	1.3	1.0	0.9	1.2

Available options for BM W 30

BM S 35 Drawings

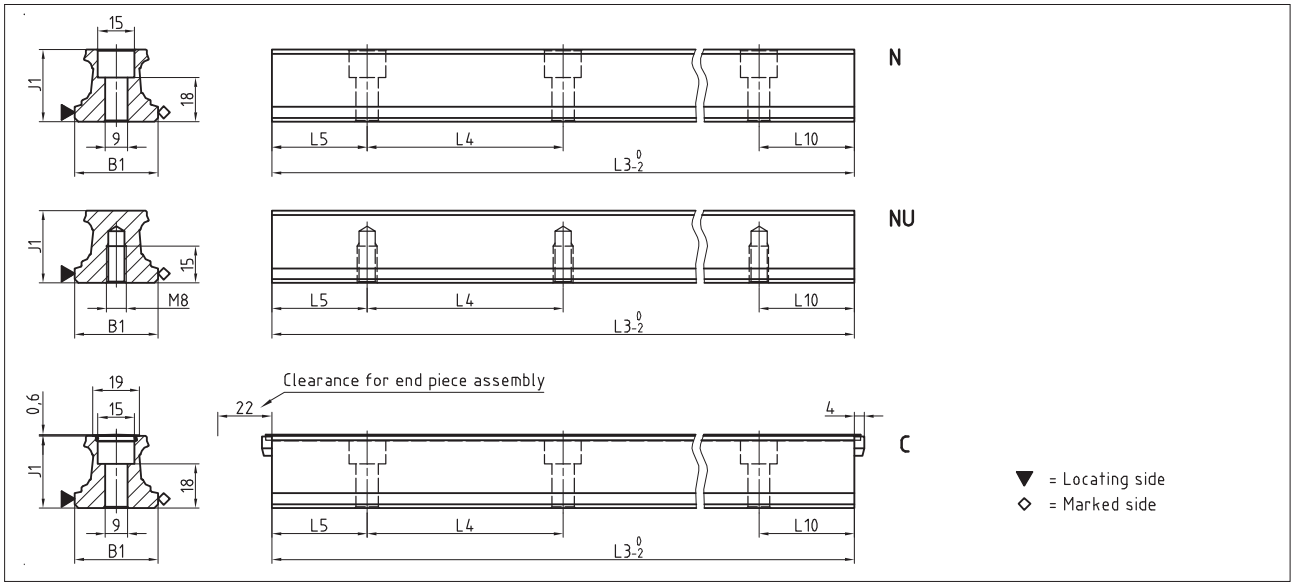

BM W 35 Drawings

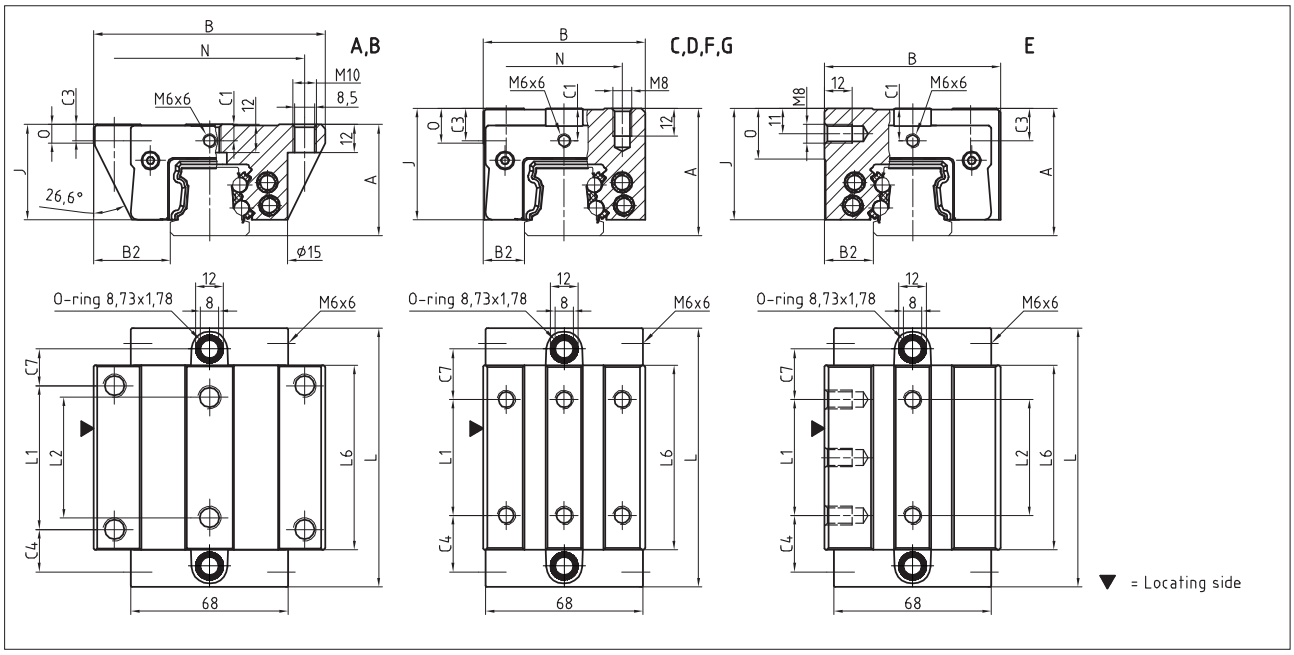

BM W 35 Rigidity diagram

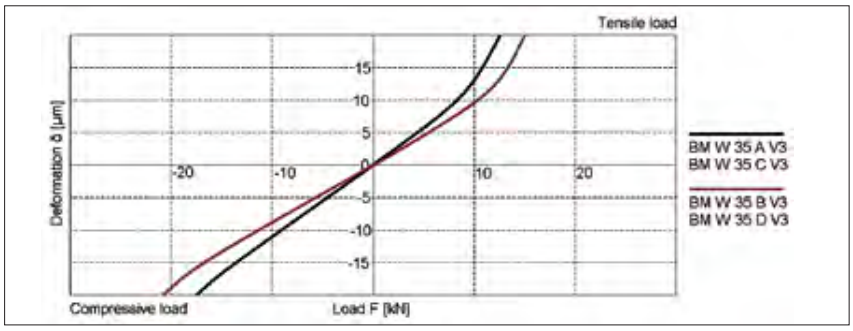

BM W 35 Load rating

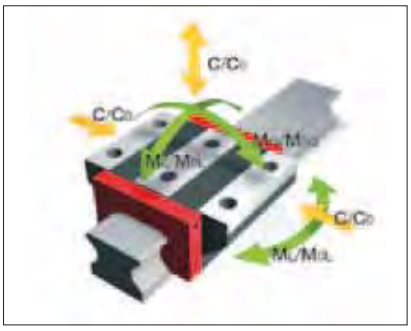

BM S 35 Dimensions



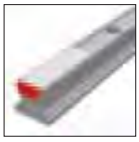

	BM S 35-N	BM S 35-NU	BM S 35-C				
B1: Rail width	34	34	34				
J1: Rail height	29.5	29.5	29.5				
L3: Rail length max.	6000	6000	6000				
L4: Spacing of fixing holes	80	80	80				
L5/L10: Position of first/last fixing hole	38.5	38.5	38.5				
Gew: Rail weight, specific (kg/m)	5.4	5.7	5.2				

Available options for BM S 35

BM W 35 Dimensions and capacities







	BM W 35-A	BM W 35-B	BM W 35-C	BM W 35-D	BM W 35-E	BM W 35-F	BM W 35-G
A: System height	48	48	55	55	55	48	48
B: Carriage width	100	100	70	70	76	70	70
B2: Distance between locating faces	33	33	18	18	21	18	18
C1: Position of center front lube hole	7	7	14	14	14	7	7
C3: Position of lateral lube hole	7	7	14	14	14	7	7
C4: Position of lateral lube hole	18.3	31.05	24.3	26.05	24.3	24.3	26.05
C7: Position of top lube hole	15.8	28.55	21.8	23.55	21.8	21.8	23.55
J: Carriage height	41	41	48	48	48	41	41
L: Carriage length	111.6	137.1	111.6	137.1	111.6	111.6	137.1
L1: Exterior fixing hole spacing	62	62	50	72	50	50	72
L2: Interior fixing hole spacing	52	52	-	-	50	-	-
L6: Steel body length	79.6	105.1	79.6	105.1	79.6	79.6	105.1
N: Lateral fixing hole spacing	82	82	50	50	-	50	50
O: Reference face height	8	8	15	15	22	8	8
Capacities and weights							
C0: Static load capacitiy (N)	84400	110300	84400	110300	84400	84400	110300
C100: Dynamic load capacity (N)	38700	46700	38700	46700	38700	38700	46700
M0Q: Static cross moment capacity (Nm)	1566	2048	1566	2048	1566	1566	2048
M0L: Static longitud. moment capacity (Nm)	1252	2104	1252	2104	1252	1252	2104
MQ: Dyn. cross moment capacity (Nm)	718	867	718	867	718	718	867
ML: Dyn. longitud. moment capacity (Nm)	574	891	574	891	574	574	891
Gew: Carriage weight (kg)	1.8	2.3	1.7	2.2	1.9	1.4	1.8

Available options for BM W 35

BM S 45 Drawings

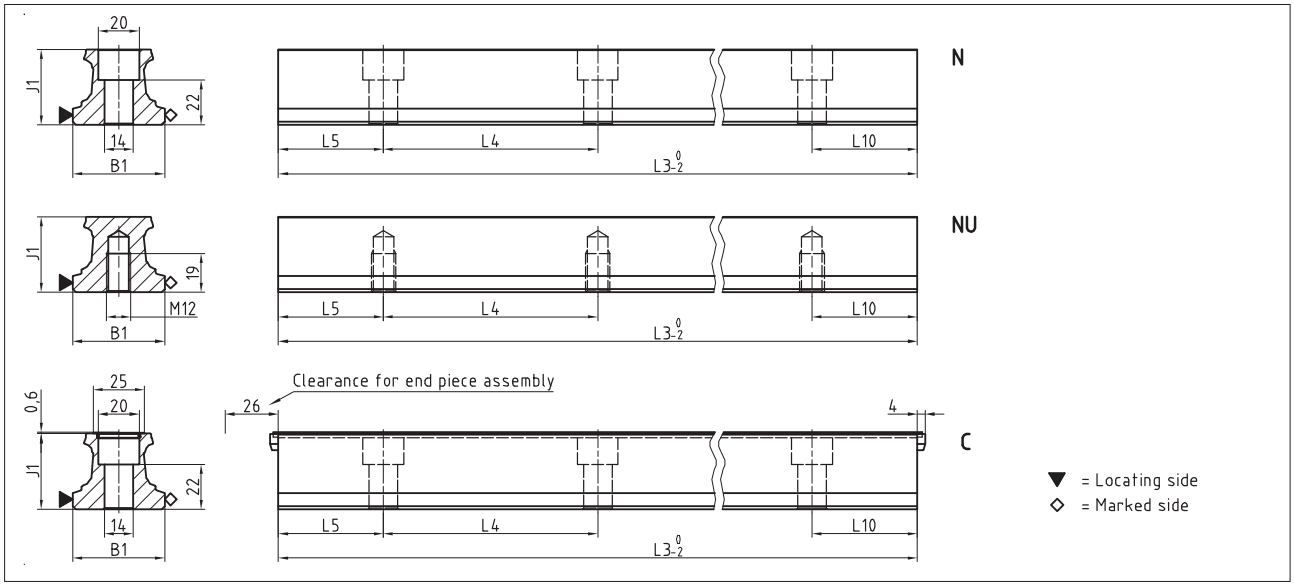

BM W 45 Drawings

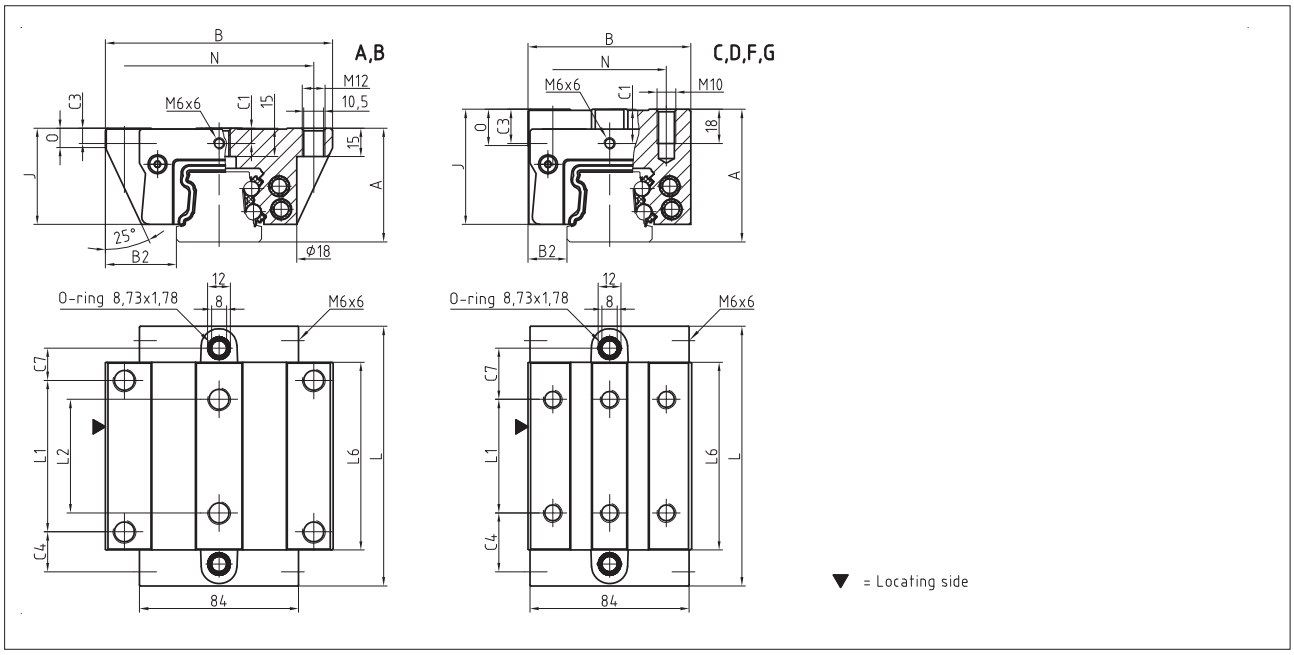

BM W 45 Rigidity diagram

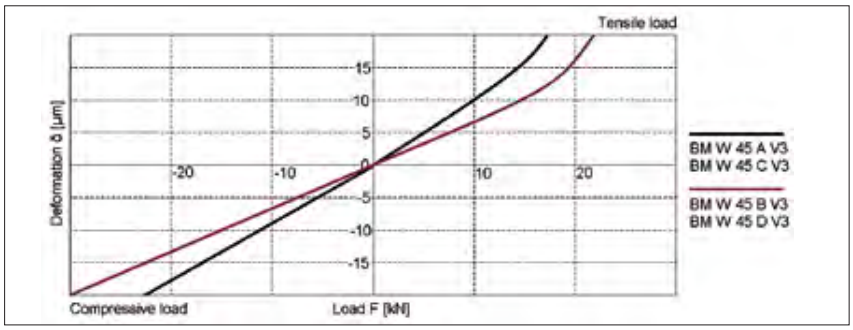

BM W 45 Load rating

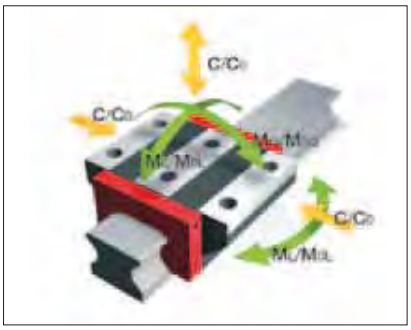

BM S 45 Dimensions



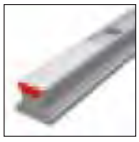

	BM S 45-N	BM S 45-NU	BM S 45-C				
B1: Rail width	45	45	45				
J1: Rail height	37	37	37				
L3: Rail length max.	6000	6000	6000				
L4: Spacing of fixing holes	105	105	105				
L5/L10: Position of first/last fixing hole	51	51	51				
Gew.: Rail weight, specific (kg/m)	8.8	9.3	8.6				

Available options for BM S 45

BM W 45 Dimensions and capacities






	BM W 45-A	BM W 45-B	BM W 45-C	BM W 45-D	BM W 45-F	BM W 45-G	
A: System height	60	60	70	70	60	60	
B: Carriage width	120	120	86	86	86	86	
B2: Distance between locating faces	37.5	37.5	20.5	20.5	20.5	20.5	
C1: Position of center front lube hole	8	8	18	18	8	8	
C3: Position of lateral lube hole	8	8	18	18	8	8	
C4: Position of lateral lube hole	21.05	36.8	31.05	36.8	31.05	36.8	
C7: Position of top lube hole	17.05	32.8	27.05	32.8	27.05	32.8	
J: Carriage height	50.8	50.8	60.8	60.8	50.8	50.8	
L: Carriage length	137.1	168.6	137.1	168.6	137.1	168.6	
L1: Exterior fixing hole spacing	80	80	60	80	60	80	
L2: Interior fixing hole spacing	60	60	-	-	-	-	
L6: Steel body length	99.1	130.6	99.1	130.6	99.1	130.6	
N: Lateral fixing hole spacing	100	100	60	60	60	60	
O: Reference face height	10	10	19	19	10	10	
Capacities and weights							
C0: Static load capacitiy (N)	134800	176300	134800	176300	134800	176300	
C100: Dynamic load capacity (N)	61900	74700	61900	74700	61900	74700	
M0Q: Static cross moment capacity (Nm)	3193	4175	3193	4175	3193	4175	
M0L: Static longitud. moment capacity (Nm)	2498	4199	2498	4199	2498	4199	
MQ: Dyn. cross moment capacity (Nm)	1466	1769	1466	1769	1466	1769	
ML: Dyn. longitud. moment capacity (Nm)	1147	1779	1147	1779	1147	1779	
Gew: Carriage weight (kg)	3.3	4.2	3.3	4.3	2.7	3.5	

Available options for BM W 45

BM Rails Accessories overview

Accessories	BM S 15	BM S 20	BM S 25	BM S 30	BM S 35	BM S 45
Plugs:						
Plastic plugs	BRK 15	BRK 20	BRK 25	BRK 30	BRK 35	BRK 45
Cover strips:						
Cover strip (spare part)	BAC 15	BAC 20	BAC 25	BAC 30	BAC 35	BAC 45
Securing band for cover strip (spare part)	BSC 15-BAC	BSC 20-BAC	BSC 25-BAC	BSC 30-BAC	BSC 35-BAC	BSC 45-BAC
End piece for cover strip (spare part)	EST 15-BAC	EST 20-BAC	EST 25-BAC	EST 30-BAC	EST 35-BAC	EST 45-BAC
Assembly tools:						
Installation tool for cover strip	BWC 15	BWC 20	BWC 25	BWC 30	BWC 35	BWC 45

BM Carriages Accessories overview

Accessories	BM W 15	BM W 20	BM W 25	BM W 30	BM W 35	BM W 45
Additional wipers:						
Additional wipers NBR	ZBN 15	ZBN 20	ZBN 25	ZBN 30	ZBN 35	ZBN 45
Additional wipers Viton	ZBV 15	ZBV 20	ZBV 25	ZBV 30	ZBV 35	ZBV 45
Metal wiper	ABM 15	ABM 20	ABM 25	ABM 30	ABM 35	ABM 45
Bellows:						
Bellows	-	FBB 20	FBB 25	FBB 30	FBB 35	FBB 45
Adapter plate for bellows (spare part)	-	ZPB 20	ZPB 25	ZPB 30	ZPB 35	ZPB 45
End plate for bellows (spare part)	-	EPB 20	EPB 25	EPB 30	EPB 35	EPB 45
Assembly rails:						
Assembly rail	MBM 15	MBM 20	MBM 25	MBM 30	MBM 35	MBM 45
Lubrication plates:						
Lubrication plate	SPL 15-BM	SPL 20-BM	SPL 25-BM	SPL 30-BM	SPL 35-BM	SPL 45-BM
Front plates:						
Cross wiper for front plate (spare part)	QAS 15-STB	QAS 20-STB	QAS 25-STB	QAS 30-STB	QAS 35-STB	QAS 45-STB
Lube nippels:						
Hydraulic-type grease nipple straight	-	SN 6	SN 6	SN 6	SN 6	SN 6
Hydraulic-type grease nipple 45°	-	SN 6-45	SN 6-45	SN 6-45	SN 6-45	SN 6-45
Hydraulic-type grease nipple 90°	-	SN 6-90	SN 6-90	SN 6-90	SN 6-90	SN 6-90
Flush type grease nipple M3	SN 3-T	SN 3-T	-	-	-	-
Flush type grease nipple M6	-	SN 6-T	SN 6-T	SN 6-T	SN 6-T	SN 6-T
Grease gun for SN 3-T und SN 6-T	SFP-T3	SFP-T3	SFP-T3	SFP-T3	SFP-T3	SFP-T3
Lube adapters:						
Straight screw-in connection M3	SA 3-D3	SA 3-D3	-	-	-	-
Lubrication adapter M8 round-head	-	SA 6-RD-M8	SA 6-RD-M8	SA 6-RD-M8	SA 6-RD-M8	SA 6-RD-M8
Lubrication adapter M8 hexagon head	-	-	-	SA 6-6KT-M8	SA 6-6KT-M8	SA 6-6KT-M8
Lubrication adapter G1/8 hexagon head	-	-	-	SA 6-6KT-G1/8	SA 6-6KT-G1/8	SA 6-6KT-G1/8
Swivel screw connection for pipe d=4 mm	-	SV 6-D4	SV 6-D4	SV 6-D4	SV 6-D4	SV 6-D4
Swivel screw connection M6	-	SV 6-M6	SV 6-M6	SV 6-M6	SV 6-M6	SV 6-M6
Swivel screw connection M6 long	-	SV 6-M6-L	SV 6-M6-L	SV 6-M6-L	SV 6-M6-L	SV 6-M6-L
Swivel screw connection M8	-	SV 6-M8	SV 6-M8	SV 6-M8	SV 6-M8	SV 6-M8
Swivel screw connection M8 long	-	SV 6-M8-L	SV 6-M8-L	SV 6-M8-L	SV 6-M8-L	SV 6-M8-L

BM Rails accessory details

Plastic plugs
BRK plastic plugs are used as a low-cost method of closing off the rail attachment holes. They can be fitted manually with fairly simple tools. Plastic plugs are recommended for use with protected axes or in environments with low levels of contamination, e.g. handling.

Quantity supplied: Pack of 25 pcs

Order code: **BRK xx**
xx = Size, sample order: 3 x BRK 35 (75 pcs)

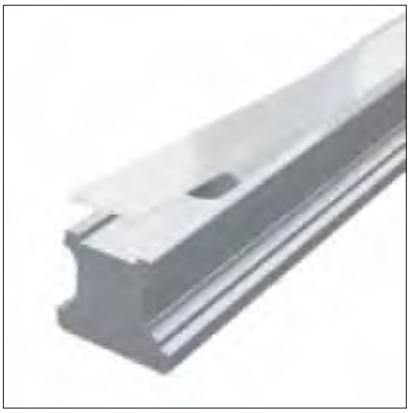

Cover strip (spare part)
A BAC cover strip combines technical functionality with simple installation and neat appearance.
Made of stainless spring steel, the strip is suitable for demanding applications with enhanced mechanical and thermal loading.

It provides the following advantages:
- Reliable fixing along the length as it is clipped into a special groove
- Additional fixing of the ends of the strips using locking parts (EST xx-BAC)
- Very robust due to the substantial thickness of the material
- Can be fitted and removed several times
- Protection of the wipers during installation as the rail fixing holes are recessed in the groove
- In any length up to 30 m available

When ordering guide rails with cover strips, they are included in the scope of supply.

Order code: **BAC xx-yy**
xx = Size, yy= Rail length in mm, sample order: 1 x BAC 35-4560

End piece for cover strip (spare part)
EST end pieces are used to close the ends of BAC cover strips. To do this, these plastic parts are inserted on both ends of the rail into the gap under the cover strip. Their special design prevents the ends of the cover strip from lifting and reduces the danger of injury on the sharp edges of the cover strip.

Order code: **EST xx-BAC**
xx = Size, sample order: 2 x EST 35-BAC

BM Rails accessory details

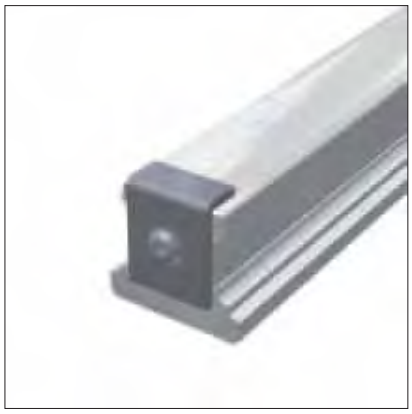

Securing band for cover strip (spare part)
The BSC securing band for cover strips is used to secure the ends when mechanical loads are high. To do this, the protruding band ends are cut off at right angles and burr-free, and a fastening thread is fitted to the front face of the rail.
Securing bands are used in applications with high vibration levels, with rails in open chip spaces, with rail lengths of less than 600 mm or for vertical fitting and the subsequent risk that EST endpieces could fall out.
The securing band also covers the ends of the cover strips and reduces the risk of injury on the sharp corners of the ends.

Order code: **BSC xx-MAC**
xx = Size, order example: 2 x BSC 65-MAC

Installation tool for cover strip
An MWH fitting tool is used to insert MRZ two-part steel plugs hydraulically. It consists of a specially sized shoe and insertion ram. The fitting tool also requires an MZH hydraulic cylinder. For assembly the shoe and the insertion ram must be screwed to the hydraulic cylinder.

Order code: **MWH xx**
xx = Size, sample order: 1 x MWH 35

BM Carriages accessory details

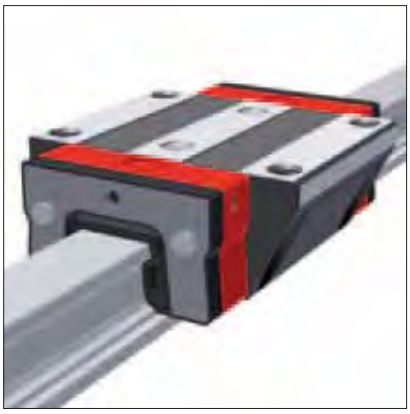

Additional wiper NBR
Additional ZBN-U nitrile wipers provide additional protection of the carriages in heavily contaminated environments. Due to their flexibility, they can be fitted directly over the rail cross section. It is therefore not necessary to remove the carriage from the rail.
ZBN-U wipers can also be used in combination with ABM metal wipers.

Order code: **ZBN xx-U**
xx = Size, sample order: 2 x ZBN 35-U

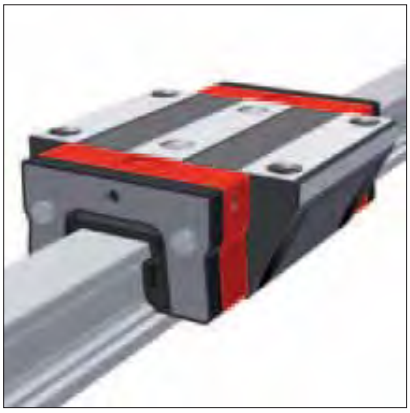

Additional wiper Viton
Like ZBN-U wipers, ZBV-U additional wipers provide additional protection of the carriages in heavily contaminated environments. Made of Viton® (fluoroelastomer), they are also suitable for use with aggressive coolants. Since they can be pushed over the rail cross section due to their flexibility, retrofitting is possible without any need to remove the carriage from the rail. ZBV-U wipers can also be used in combination with ABM metal wipers.

Order code: **ZBV xx-U**
xx = Size, sample order: 2 x ZBV 35-U

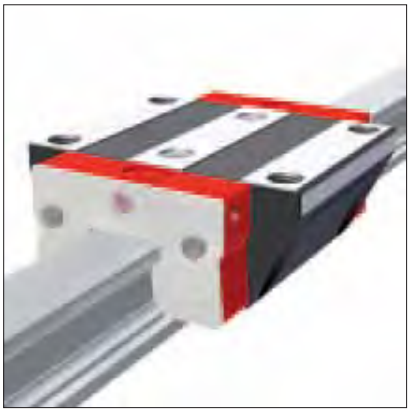

Metal wiper
Made of stainless steel, ABM metal wipers are used to protect the sealing lips of carriages and additional wipers against hot metal chips. Large and loose dirt particles are pushed away and cannot get jammed due to the controlled dimension of the gap with the rail. Specially adapted types are available for rails using AMS measuring systems.
Metal wipers are ideally used in combination with ZBN-U/ZCV-U additional wipers.

Order code: **ABM xx**
xx= Size, sample order: 1 x ABM 35

BM Carriages accessory details

Bellows
A standard FBB bellows is available for MONORAIL sizes BM 20 – BM 45, the purpose of which is mainly to provide additional protection against dust and water splashes. The bellows are made of synthetic fabric coated on both sides with plastic. The bellows cover the entire length of the rail profile matching the relevant faceplate of the carriage. The external dimensions of the carriage are not exceeded by the bellows.
Installation is simple and takes little time. A ZPB adapter plate is required to attach the bellows to the carriage. The adapter plate is screwed to the front plate of the carriage using a central screw. An EPB end plate is screwed to the end face of the rail. The bellows are fastened by two rivets to both the adapter plate and the front plate.
The required adapter and end plates, attachment screws and rivets are supplied with each order for a complete set of bellows. The attachment holes for the end plate are also prepared in the rail when a guideway with bellows is ordered.

Order code: **FBB xx-yy**
xx = Size, yy = Number of folds, sample order: 1 x FBB 35-146

Adapter plate for bellows (spare part)
A ZPB adapter plate is used to attach FBB bellows to the carriage and is included with every order for a bellows. It is made of black anodized aluminium. The outer contour of the adapter plate corresponds to that of the carriage front plate, the bellows and the end plate. The central fastening screw is included in the scope of supply.

Order code: **ZPB xx**
xx = Size, sample order: 2 x ZPB 35

End plate for bellows (spare part)
Made of black anodized aluminium, an EPB end plate is used to attach the FBB bellows to the end of the rail. It is included with every order for a set of bellows. The attachment holes must be drilled in the rail if the bellows are to be retrofitted. For this reason, we recommend the use of induction-hardened rails for retrofits. The outer contour of the end plate corresponds to that of the carriage front plate, the bellows and the adapter plate. Both fastening screws are supplied with the end plate.

Order code: **EPB xx**
xx = Size, sample order: 2 x EPB 35

BM Carriages accessory details

Assembly rail
An MBM assembly rail is required when a carriage has to be removed from the rail and then reinstalled during the installation of the MONORAIL guideway.
It is advisable to leave the assembly rail in the carriage to protect the balls against contamination. If necessary, the two internal carriage attaching screws can be fitted and tightened through the two holes in the assembly rail.

Order code: **MBM xx**
xx = Size, sample order: 1 x MBM 35

Lubrication plate
An SPL lubrication plate is used wherever long lubrication intervals are required. Thanks to its integral oil reservoir, the rolling elements are supplied with an automatic and uniform supply of lubrication over an extended period.
It is ideally used in dry and clean environments as in handling technology or on the ancillary axes of machine tools.

The advantages are:
- Assured supply of lubrication in any installation position
- Long lubrication intervals of up to 5,000 km or 12 months according to use
- Refill apertures closed with screws
- Reduced outlay on lubrication and accessories
- Low environmental impact thanks to minimum consumption of lubricant
- Wipers have a long service life as oil is also supplied to the top surface of the rail

For maximum travel distances without re-lubrication, the lubrication plates are always used in pairs and the carriages are given an additional filling of grease.
The lubrication plates have the same dimensions as the carriage front plates and are installed in front of these. Retrofitting is possible.
Additional ZBN-U/ZBV-U wipers must be provided in applications in which particles of dirt can come into contact with the guideways.

Order code: **SPL xx-BM**
xx = Size, sample order: 2 x SPL 35-BM

Cross wiper for front plate (spare part)
QAS twin-lip cross wipers, integrated into the end plate, seal the carriage at the ends, thus preventing the ingress of dirt and the loss of lubricant.
As the cross wipers are subject to normal wear, they must be examined regularly and replaced if necessary.

Order code: **QAS xx-STB**
xx = Size, sample order: 1 x QAS 35-STB

4.4 Order key

Individual guide rails and carriages are ordered in accordance with the order codes described below.
Q.v. chapter 2.1 and chapter 4.3 for the order key for accessories.
Separate order codes are used in each case for rails, carriages and accessories. This also applies to different versions of rails and carriages.
All guide components are supplied individually as standard, i.e. unassembled.
If required, SCHNEEBERGER can also supply rails and carriages assembled incl. accessories as complete systems. Please note the ordering instructions in chapter 2.4 if this applies.

Order code for BM Rails

	2x	BM S	25	-N	-G3	-KC	-R1	-958	-29	-29	-CN
Quantity											
Rail											
Size											
Type											
Accuracy											
Straightness											
Reference side											
Rail length L3											
Position of first fixing hole L5											
Position of last fixing hole L10											
Coating											

NB
Q.v. chapter 4.1 to 4.3 for an overview of types, details of shapes, available options and accessories.
Q.v. chapter 2 for a description of the options.
If possible, standard lengths are preferred for L3 rail length.
These are calculated with the table values in chapter 4.2 using the following formula: $L3 = n \times L4 + L5 + L10 \leqslant L3max$.

Order code for BM Carriages

	4x	BM W	25	-A	-G3	-V1	-R1	-CN	-S10	-LN
Quantity										
Carriage										
Size										
Type										
Accuracy										
Preload										
Reference side										
Coating										
Lube connection										
Lubrication as delivered condition										

NB
Q.v. chapter 4.1 to 4.3 for an overview of types, details of shapes, available options and accessories.
Q.v. chapter 2 for a description of the options.

5.0 MONORAIL BM WR / BM SR

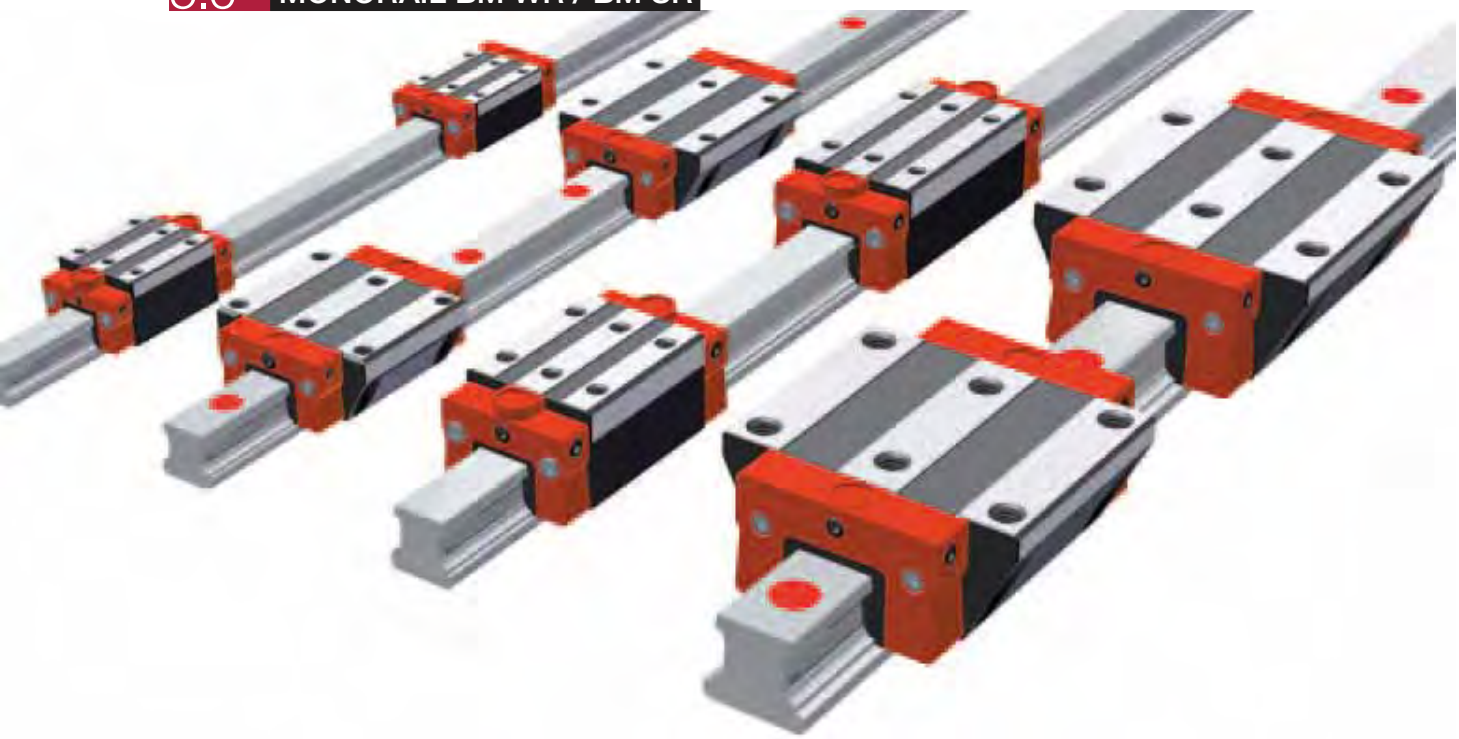

The MONORAIL BM WR/SR systems are linear guides made from corrosion-resistant steel, and are based on the MONORAIL BM ball profiled linear guideway. They were developed specially for specifications which would exceed the requirements of ordinary coatings for linear guideways. This is the case when the performance of the product is impaired by corrosion during processes.
In applications such as machines for foodstuffs, medical technology and cleanrooms, or vacuum applications, MONORAIL BM WR/SR products ensure that the operation of linear axes is clean, accurate, long-term and free of problems.
Furthermore, the MONORAIL WR/SR has the same tried and tested properties of the MONORAIL BM, such as the most effective operating characteristics, high travel speeds and a long operating life.

Features of System MONORAIL BM WR / BM SR

Details see chapter 1

5.1 Overview of types, sizes and available options

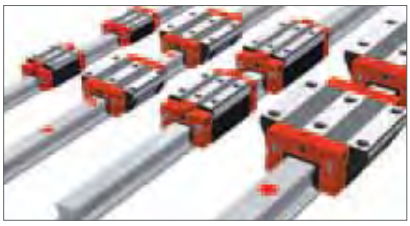

5.2 Technical data and options

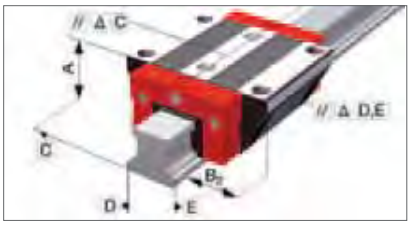

5.3 Accessories MONORAIL BM WR / BM SR

5.4 Order key

Product overview BM SR Rails


Buildsizes / Rail build forms	**ND** standard, through hardened	**NUD** with tapped holes at the bottom, through hardened					
Size 15	BM SR 15-ND	BM SR 15-NUD					
Size 20	BM SR 20-ND	BM SR 20-NUD					
Size 25	BM SR 25-ND	BM SR 25-NUD					
Size 35	BM SR 35-ND	BM SR 35-NUD					
Features							
Screwable from above	●						
Screwable from below		●					
Small assembly effort		●					

Available options for BM SR Rails

Details see chapter 2

Accuracy

- G1 Very accurate
- G2 Accurate
- G3 Standard

Straightness

- KC Standard

Reference side

- R1 Ref. at bottom
- R2 Ref. on top

Coating

- CN None

Available accessories for BM SR Rails

Details see chapter 5.3

Plugs

Product overview BM WR Carriages





Buildsizes / Carriage build forms	A standard	B standard, long	C compact, high	D compact, high, long	F compact		
Size 15	BM WR 15-A		BM WR 15-C		BM WR 15-F		
Size 20	BM WR 20-A	BM WR 20-B	BM WR 20-C	BM WR 20-D			
Size 25	BM WR 25-A	BM WR 25-B	BM WR 25-C	BM WR 25-D			
Size 35	BM WR 35-A	BM WR 35-B	BM WR 35-C	BM WR 35-D			
Features							
Screwable from above	●	●	●	●	●		
Screwable from below	●	●					
For high loads and moments		●		●			
For medium loads and moments	●		●		●		
For limited installation space					●		

Available options for BM WR Carriages

Details see chapter 2

Accuracy

- G1 Very accurate
- G2 Accurate
- G3 Standard

Preload

- V0 very low
- V1 Low
- V2 Medium

Reference side

- R1 Ref. at bottom
- R2 Ref. on top

Coating

- CN None

Lube connections

- S10 Left center
- S20 Right center
- S11 Top left
- S21 Top right
- S12 Lower left side
- S22 Lower right side
- S13 Upper left side
- S23 Upper right side
- S32 Left side
- S42 Right side

Lubrication

- LN Oil protect
- LK Customized

Available accessories for BM WR Carriages

Details see chapter 5.3 and 2.1

Additional wipers
Front plates
Bellows
Lube nippels
Assembly rails
Lube adapters
Lubrication plates

BM SR 15 Drawings

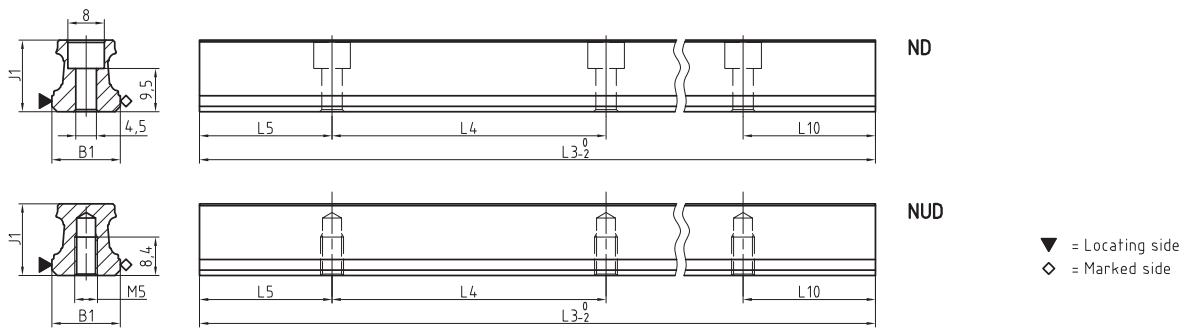

BM WR 15 Drawings

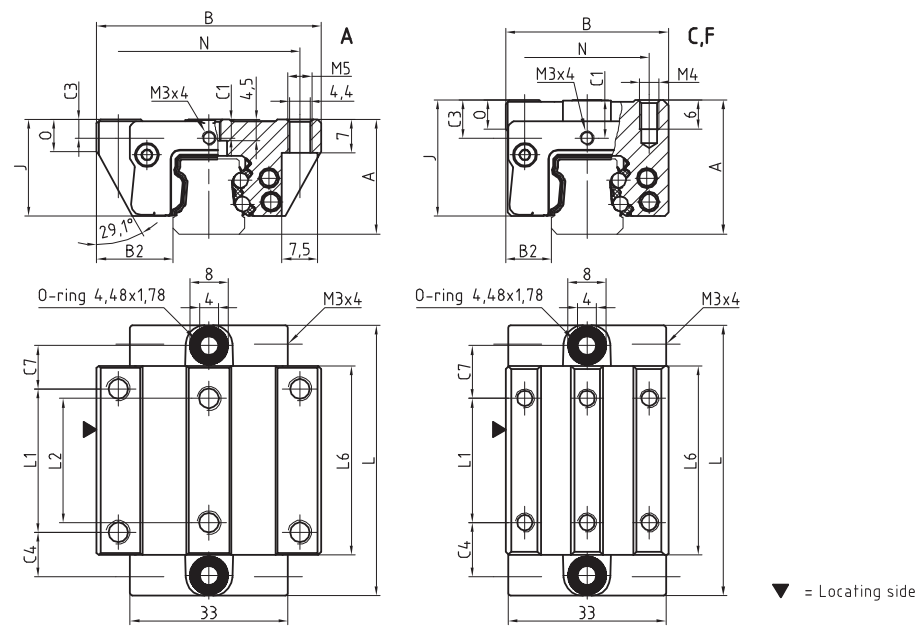

BM WR 15 Rigidity diagram

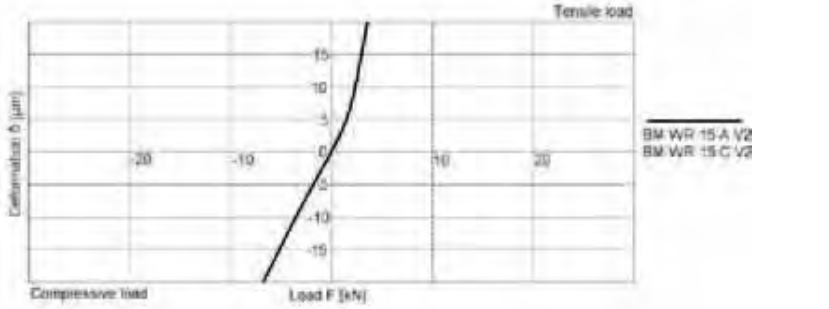

BM WR 15 Load rating

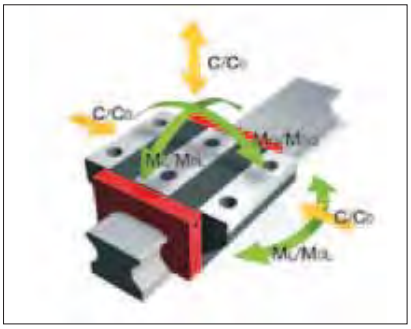

BM SR 15 Dimensions


	BM SR 15-ND	BM SR 15-NUD
B1: Rail width	15	15
J1: Rail height	15.7	15.7
L3: Rail length max.	1000	1000
L4: Spacing of fixing holes	60	60
L5/L10: Position of first/last fixing hole	28.5	28.5
Gew.: Rail weight, specific (kg/m)	1.4	1.4

Available options for BM SR 15

BM WR 15 Dimensions and capacities



	BM WR 15-A	BM WR 15-C	BM WR 15-F
A: System height	24	28	24
B: Carriage width	47	34	34
B2: Distance between locating faces	16	9.5	9.5
C1: Position of center front lube hole	4	8	4
C3: Position of lateral lube hole	4	8	4
C4: Position of lateral lube hole	9.3	11.3	11.3
C7: Position of top lube hole	9.05	11.05	11.05
J: Carriage height	20.2	24.2	20.2
L: Carriage length	56.6	56.6	56.6
L1: Exterior fixing hole spacing	30	26	26
L2: Interior fixing hole spacing	26	-	-
L6: Steel body length	39.6	39.6	39.6
N: Lateral fixing hole spacing	38	26	26
O: Reference face height	7	6	5.5
Capacities and weights			
C0: Static load capacitiy (N)	16660	16660	16660
C100: Dynamic load capacity (N)	7650	7650	7650
M0Q: Static cross moment capacity (Nm)	154	154	154
M0L: Static longitud. moment capacity (Nm)	124	124	124
MQ: Dyn. cross moment capacity (Nm)	71	71	71
ML: Dyn. longitud. moment capacity (Nm)	57	57	57
Gew: Carriage weight (kg)	0.2	0.3	0.2

Available options for BM WR 15

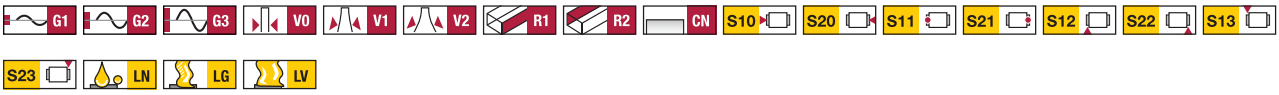

BM SR 20 Drawings

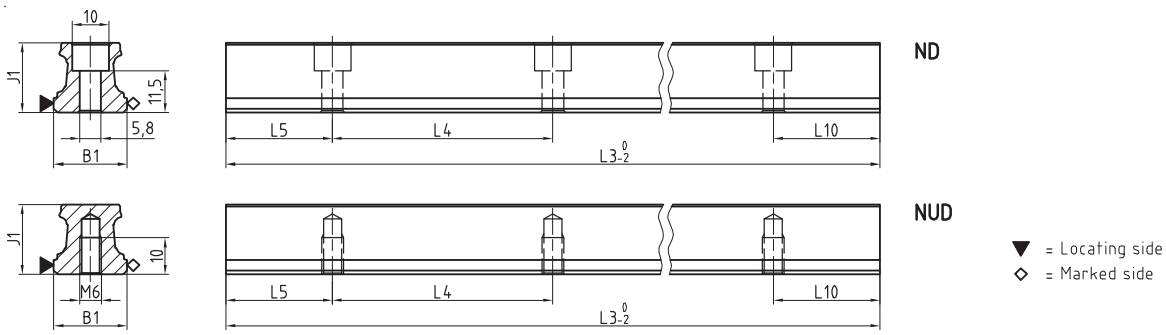

BM WR 20 Drawings

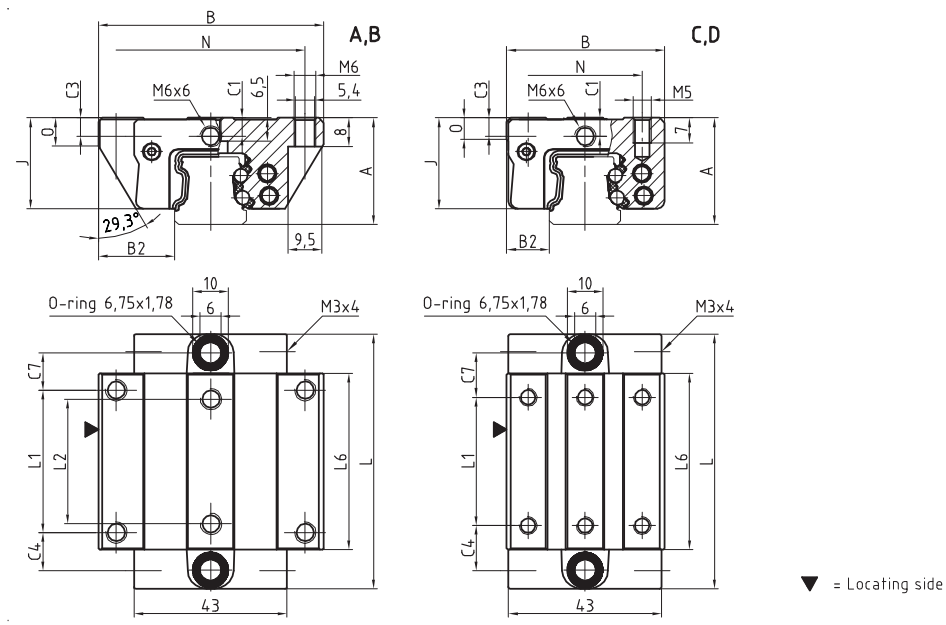

BM WR 20 Rigidity diagram

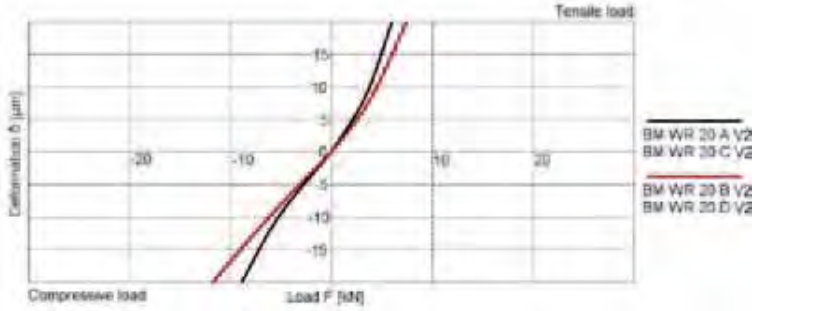

BM WR 20 Load rating

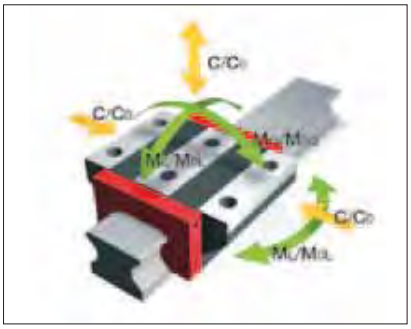

BM SR 20 Dimensions


	BM SR 20-ND	BM SR 20-NUD
B1: Rail width	20	20
J1: Rail height	19	19
L3: Rail length max.	1000	1000
L4: Spacing of fixing holes	60	60
L5/L10: Position of first/last fixing hole	28.5	28.5
Gew.: Rail weight, specific (kg/m)	2.2	2.3

Available options for BM SR 20

BM WR 20 Dimensions and capacities




	BM WR 20-A	BM WR 20-B	BM WR 20-C	BM WR 20-D
A: System height	30	30	30	30
B: Carriage width	63	63	44	44
B2: Distance between locating faces	21.5	21.5	12	12
C1: Position of center front lube hole	5.2	5.2	5.2	5.2
C3: Position of lateral lube hole	5.2	5.2	5.2	5.2
C4: Position of lateral lube hole	10.75	18.75	12.75	13.75
C7: Position of top lube hole	10.25	18.25	12.25	13.25
J: Carriage height	25.5	25.5	25.5	25.5
L: Carriage length	71.5	87.5	71.5	87.5
L1: Exterior fixing hole spacing	40	40	36	50
L2: Interior fixing hole spacing	35	35	-	-
L6: Steel body length	49.5	65.5	49.5	65.5
N: Lateral fixing hole spacing	53	53	32	32
O: Reference face height	8	8	6	6
Capacities and weights				
C0: Static load capacitiy (N)	26690	34935	26690	34935
C100: Dynamic load capacity (N)	12240	14790	12240	14790
M0Q: Static cross moment capacity (Nm)	317	417	317	417
M0L: Static longitud. moment capacity (Nm)	248	421	248	421
MQ: Dyn. cross moment capacity (Nm)	145	175	145	175
ML: Dyn. longitud. moment capacity (Nm)	114	177	114	177
Gew: Carriage weight (kg)	0.5	0.6	0.4	0.5

Available options for BM WR 20

BM SR 25 Drawings

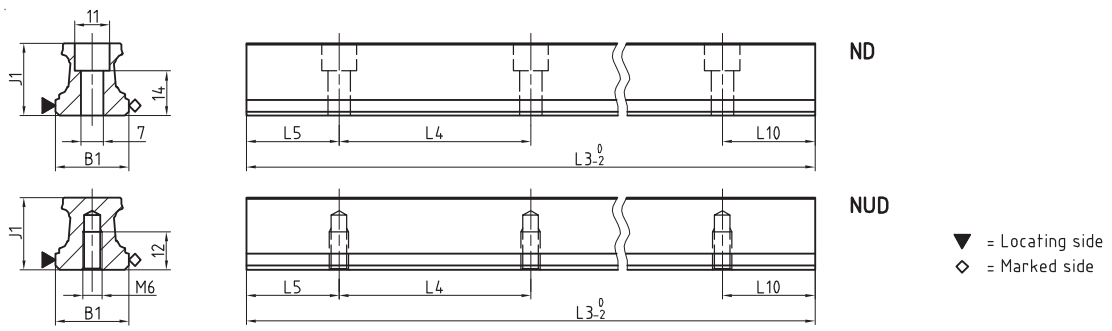

BM WR 25 Drawings

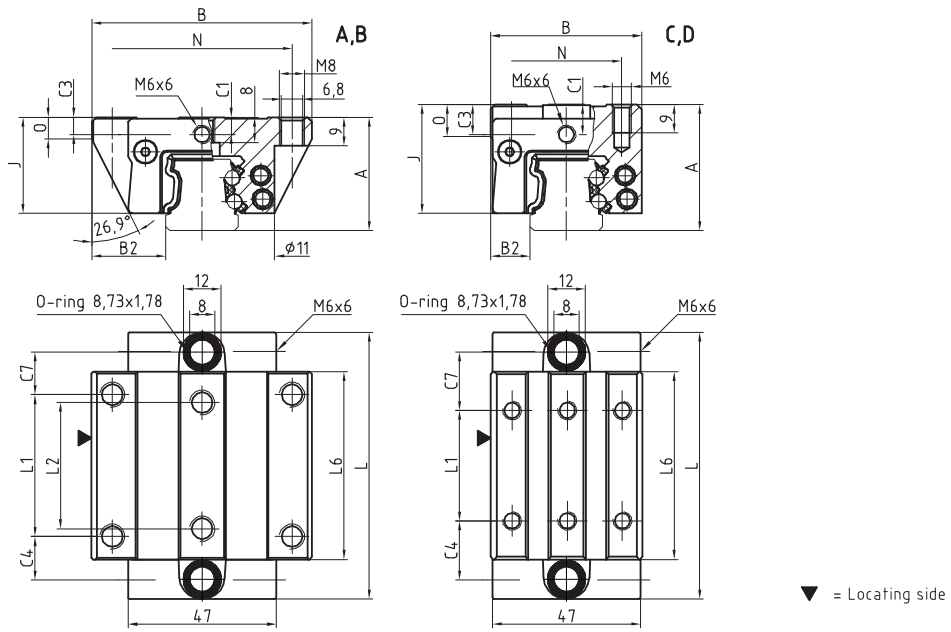

BM WR 25 Rigidity diagram

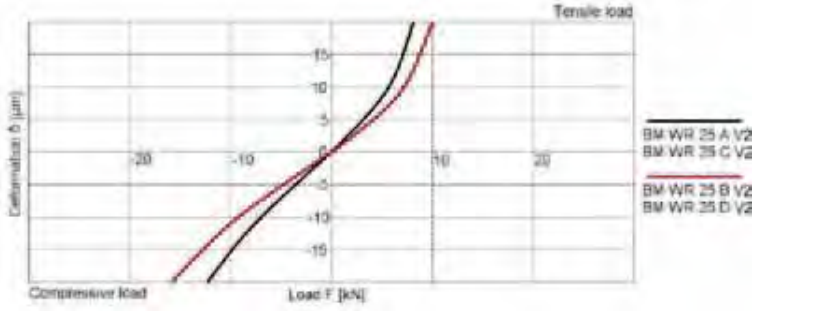

BM WR 25 Load rating

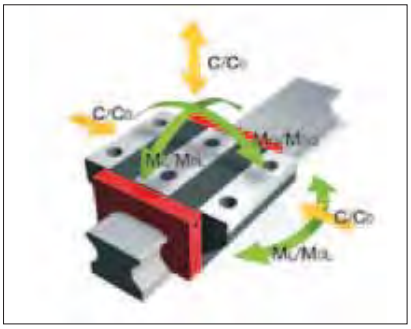

BM SR 25 Dimensions


	BM SR 25-ND	BM SR 25-NUD
B1: Rail width	23	23
J1: Rail height	22.7	22.7
L3: Rail length max.	1000	1000
L4: Spacing of fixing holes	60	60
L5/L10: Position of first/last fixing hole	28.5	28.5
Gew.: Rail weight, specific (kg/m)	3.0	3.1

Available options for BM SR 25

BM WR 25 Dimensions and capacities




	BM WR 25-A	BM WR 25-B	BM WR 25-C	BM WR 25-D
A: System height	36	36	40	40
B: Carriage width	70	70	48	48
B2: Distance between locating faces	23.5	23.5	12.5	12.5
C1: Position of center front lube hole	5.5	5.5	9.5	9.5
C3: Position of lateral lube hole	5.5	5.5	9.5	9.5
C4: Position of lateral lube hole	13.75	23.35	18.75	20.75
C7: Position of top lube hole	13.5	23	18.5	20.5
J: Carriage height	30.5	30.5	34.5	34.5
L: Carriage length	84.5	103.5	84.5	103.5
L1: Exterior fixing hole spacing	45	45	35	50
L2: Interior fixing hole spacing	40	40	-	-
L6: Steel body length	59.5	78.5	59.5	78.5
N: Lateral fixing hole spacing	57	57	35	35
O: Reference face height	7	7	11	11
Capacities and weights				
C0: Static load capacitiy (N)	39185	51255	39185	51255
C100: Dynamic load capacity (N)	17935	21675	17935	21675
M0Q: Static cross moment capacity (Nm)	536	701	536	701
M0L: Static longitud. moment capacity (Nm)	436	734	436	734
MQ: Dyn. cross moment capacity (Nm)	246	297	246	297
ML: Dyn. longitud. moment capacity (Nm)	200	310	200	310
Gew: Carriage weight (kg)	0.7	0.9	0.6	0.8

Available options for BM WR 25

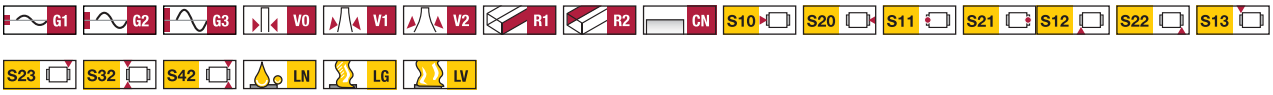

BM SR 35 Drawings

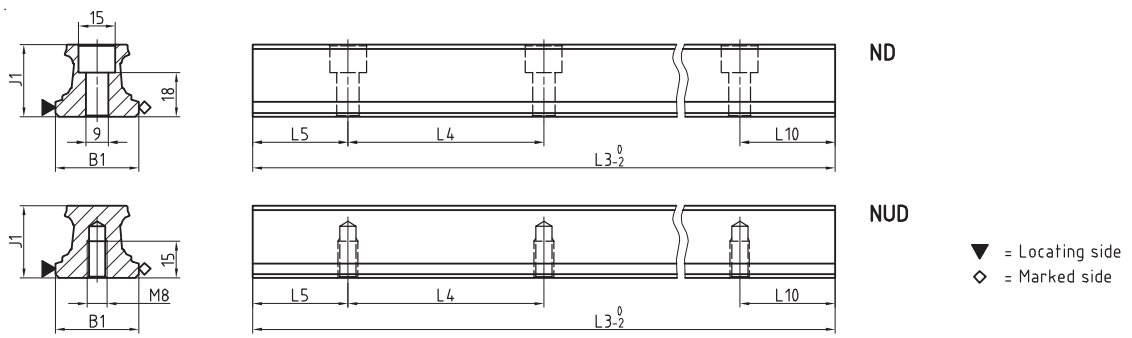

BM WR 35 Drawings

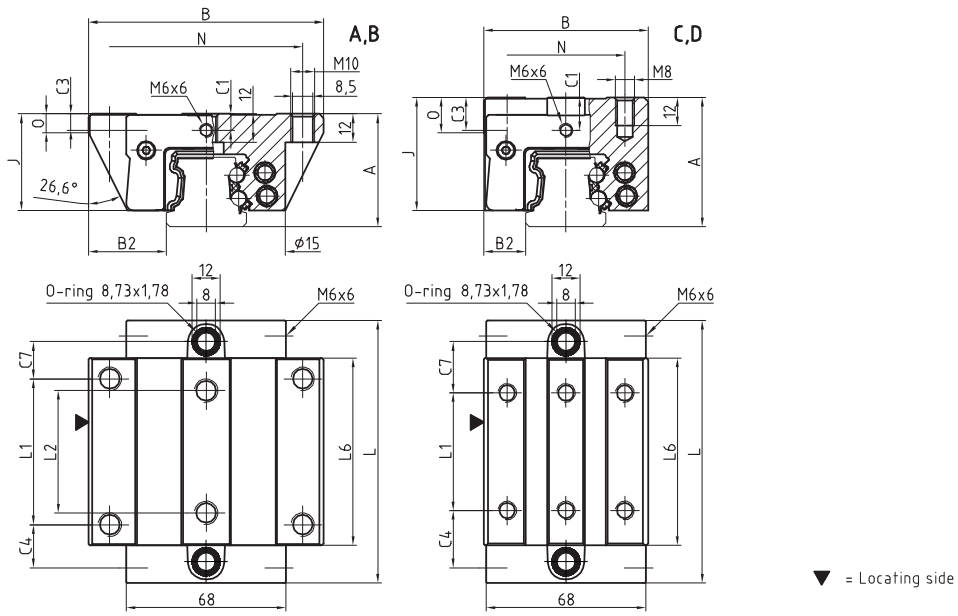

BM WR 35 Rigidity diagram

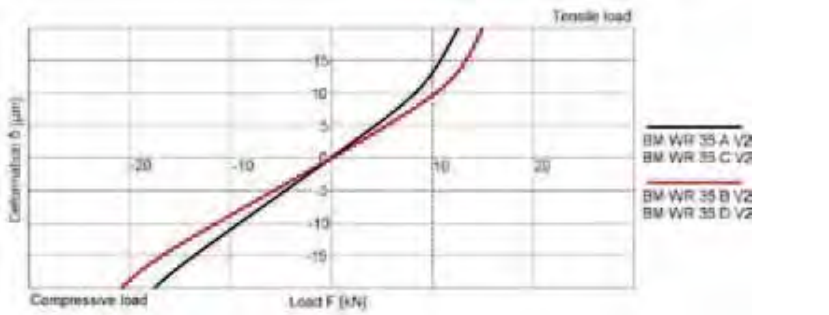

BM WR 35 Load rating

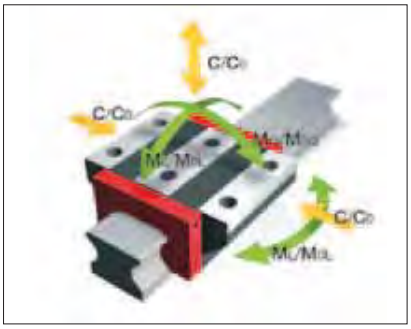

BM SR 35 Dimensions


	BM SR 35-ND	BM SR 35-NUD
B1: Rail width	34	34
J1: Rail height	29.5	29.5
L3: Rail length max.	1000	1000
L4: Spacing of fixing holes	80	80
L5/L10: Position of first/last fixing hole	38.5	38.5
Gew.: Rail weight, specific (kg/m)	5.4	5.7

Available options for BM SR 35

BM WR 35 Dimensions and capacities




	BM WR 35-A	BM WR 35-B	BM WR 35-C	BM WR 35-D
A: System height	48	48	55	55
B: Carriage width	100	100	70	70
B2: Distance between locating faces	33	33	18	18
C1: Position of center front lube hole	7	7	14	14
C3: Position of lateral lube hole	7	7	14	14
C4: Position of lateral lube hole	18.3	31.05	24.3	26.05
C7: Position of top lube hole	15.8	28.55	21.8	23.55
J: Carriage height	41	41	48	48
L: Carriage length	111.6	137.1	111.6	137.1
L1: Exterior fixing hole spacing	62	62	50	72
L2: Interior fixing hole spacing	52	52	-	-
L6: Steel body length	79.6	105.1	79.6	105.1
N: Lateral fixing hole spacing	82	82	50	50
O: Reference face height	8	8	15	15
Capacities and weights				
C0: Static load capacitiy (N)	71740	93755	71740	93755
C100: Dynamic load capacity (N)	32895	39695	32895	39695
M0Q: Static cross moment capacity (Nm)	1331	1741	1331	1741
M0L: Static longitud. moment capacity (Nm)	1064	1788	1064	1788
MQ: Dyn. cross moment capacity (Nm)	610	737	610	737
ML: Dyn. longitud. moment capacity (Nm)	488	757	488	757
Gew: Carriage weight (kg)	1.8	2.3	1.7	2.2

Available options for BM WR 35

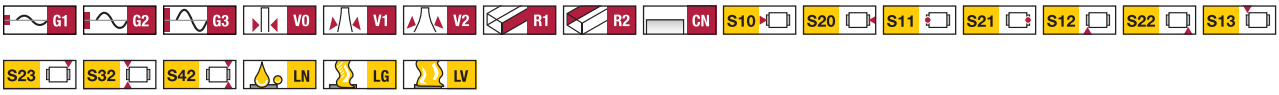

BM SR Rails accessories overview

Accessories	BM SR 15	BM SR 20	BM SR 25	BM SR 35
Plugs:				
Plastic plugs	BRK 15	BRK 20	BRK 25	BRK 35

BM WR Carriages accessories overview

Accessories	BM WR 15	BM WR 20	BM WR 25	BM WR 35
Additional wipers:				
Additional wipers NBR	ZBN 15	ZBN 20	ZBN 25	ZBN 35
Additional wipers Viton	ZBV 15	ZBV 20	ZBV 25	ZBV 35
Metal wiper	ABM 15	ABM 20	ABM 25	ABM 35
Bellows:				
Bellow	-	FBB 20	FBB 25	FBB 35
Adapter plate for bellows (spare part)	-	ZPB 20	ZPB 25	ZPB 35
End plate for bellows (spare part)	-	EPB 20	EPB 25	EPB 35
Assembly rails:				
Assembly rail	MBM 15	MBM 20	MBM 25	MBM 35
Lubrication plates:				
Lubrication plate	SPL 15-BM	SPL 20-BM	SPL 25-BM	SPL 35-BM
Front plates:				
Cross wiper for front plate (spare part)	QAS 15-STB	QAS 20-STB	QAS 25-STB	QAS 35-STB
Corrosion resistant grease nipples:				
Hydraulic-type grease nipple straight M3	SN 3	SN 3	-	-
Hydraulic-type grease nipple straight M6	-	SN 6-V2A	SN 6-V2A	SN 6-V2A
Hydraulic-type grease nipple 45°	-	SN 6-45-V2A	SN 6-45-V2A	SN 6-45-V2A
Hydraulic-type grease nipple 90°	-	SN 6-90-V2A	SN 6-90-V2A	SN 6-90-V2A
Flush type grease nipple M3 45°	SN 3-T-45	SN 3-T-45	-	-
Grease gun for SN 3-T und SN 6-T	SFP-T3	SFP-T3	SFP-T3	SFP-T3
Corrosion resistant grease nipples:				
Straight screw-in connection M3	SA 3-D3	SA 3-D3	-	-
Straight screw-in connection M6	-	SA 6-D4	SA 6-D4	SA 6-D4
Lubrication adapter M8 hexagon head long	-	SA 6-6KT-M8x1-L	SA 6-6KT-M8x1-L	SA 6-6KT-M8x1-L
Swivel screw connection for pipe d=3 mm	SV 3-D3	SV 3-D3	-	-
Swivel screw connection for pipe d=4 mm	-	SV 6-D4	SV 6-D4	SV 6-D4
Swivel screw connection M8	-	SV 6-M8x1	SV 6-M8x1	SV 6-M8x1

Other lubrication systems upon request

5.4 Order key

Individual guide rails and carriages are ordered in accordance with the order codes described below.
Q.v. chapter 2.1 and chapter 5.3 for the order key for accessories.
Separate order codes are used in each case for rails, carriages and accessories. This also applies to different versions of rails and carriages.
All guide components are supplied individually as standard, i.e. unassembled.
If required, SCHNEEBERGER can also supply rails and carriages assembled incl. accessories as complete systems. Please note the ordering instructions in chapter 2.4 if this applies.

Order code for BM SR Rails

	2x	BM SR	25	-N	-G3	-KC	-R1	-958	-29	-29	-CN
Quantity											
Rail											
Size											
Type											
Accuracy											
Straightness											
Reference side											
Rail length L3											
Position of first fixing hole L5											
Position of last fixing hole L10											
Coating											

NB

Q.v. chapter 5.1 to 5.3 for an overview of types, details of shapes, available options and accessories.
Q.v. chapter 2 for a description of the options.
If possible, standard lengths are preferred for L3 rail length.
These are calculated with the table values in chapter 5.2 using the following formula: $L3 = n \times L4 + L5 + L10 \leqslant L3max$.

Order code for BM WR Carriages

	4x	BM WR	25	-A	-G3	-V1	-R1	-CN	-S99	-LN
Quantity										
Carriage										
Size										
Type										
Accuracy										
Preload										
Reference side										
Coating										
Lube connection										
Lubrication as delivered condition										

NB

Q.v. chapter 5.1 to 5.3 for an overview of types, details of shapes, available options and accessories.
Q.v. chapter 2 for a description of the options.

6.0 MONORAIL BZ

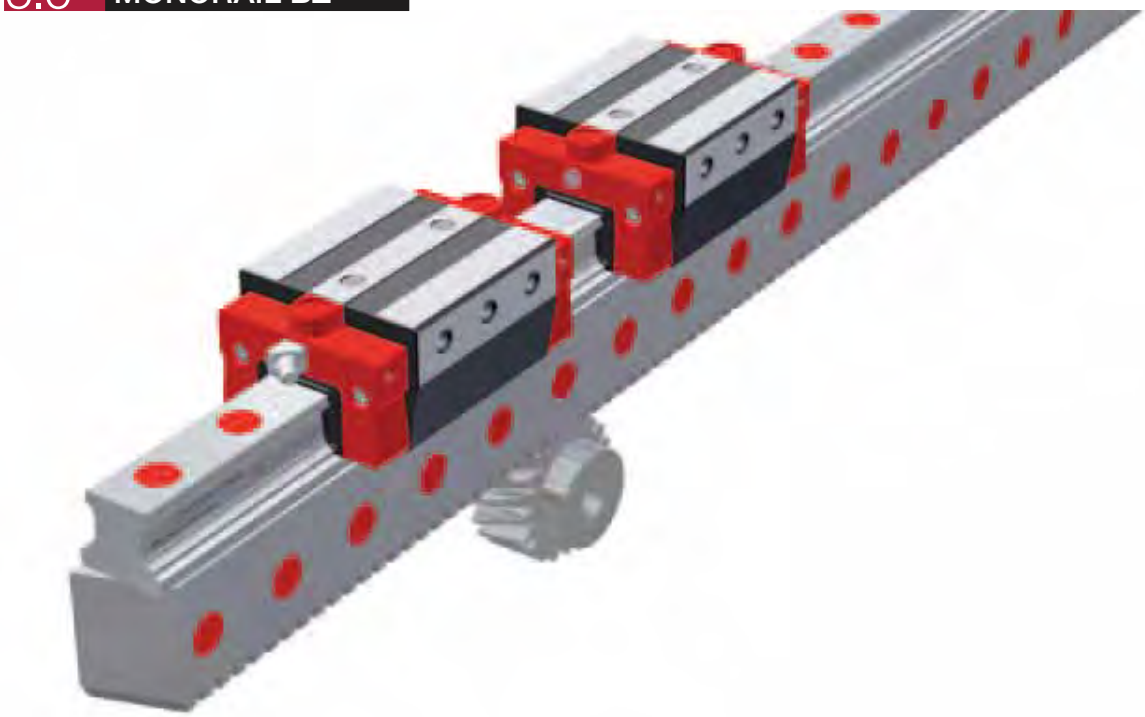

With its BZ MONORAIL, SCHNEEBERGER offers linear guide systems that extend the characteristic properties of the company's BM MONORAIL profile rail guides to include the advantages of an integral and high-precision rack drive.
Customers gain the following decisive benefits:
- One-piece system up to 6000 mm long
- High-quality gear rack (hardened and ground)
- Cost savings of up to 25% due to reduced outlay on manufacturing and assembly
- Superlative operating properties, high load carrying capacity and a long service life based on our proven MONORAIL linear guides
- Oriented towards customer requirements due to the large number of carriage types available with BM ball guides and a comprehensive range of accessories and customised gear types and grades.

Features of System MONORAIL BZ

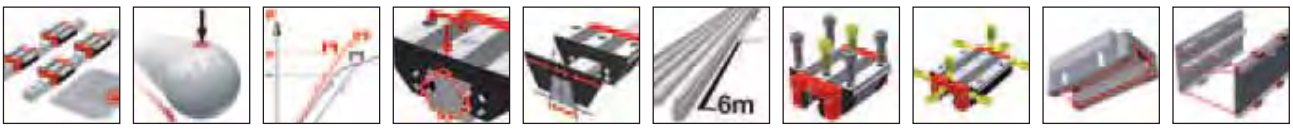

Details see chapter 1

6.1 Overview of types, sizes and available options

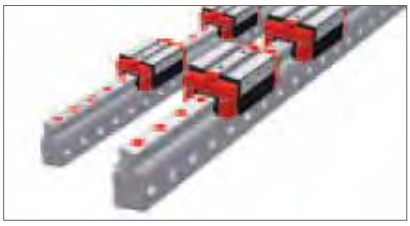

6.2 Technical data and options

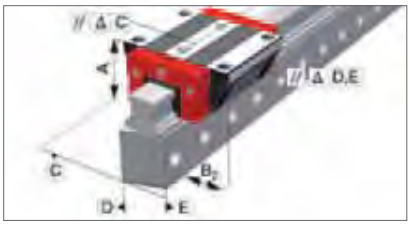

6.3 Accessories MONORAIL BZ

6.4 Order key

Product overview BZ Rails

Buildsizes / Rail build forms	NX standard, half pitch					
Size 25	BZ S 25-NX					
Size 35	BZ S 35-NX					
Features						
Screwable from the side	●					
Good accessibility of the fixing screws	●					
Great single-part system length	●					

Available options for BZ Rails

Details see chapter 2

Toothing quality

- Q6S Q6, smooth, milled
- Q5H Q5, hard, ground

Reference side

- R1 Ref. at bottom
- R2 Ref. on top

Coating

- CN None
- CH Hard chromium

Available accessories for MR Rails

Details see chapter 6.3

Plugs

Pinions

Others

6.1 Overview of types, sizes and available options BZ Carriages

Product overview BM Carriages

Buildsizes / Carriage build forms	A standard	B standard, long	C compact, high	D compact, high, long	E compact, high, for lateral fixation	F compact	G compact, long
Size 25	BM W 25-A	BM W 25-B	BM W 25-C	BM W 25-D	BM W 25-E	BM W 25-F	BM W 25-G
Size 35	BM W 35-A	BM W 35-B	BM W 35-C	BM W 35-D	BM W 35-E	BM W 35-F	BM W 35-G
Features							
Screwable from above	●	●	●	●		●	●
Screwable from below	●	●					
Screwable from the side					●		
For high loads and moments		●		●			●
For medium loads and moments	●		●		●	●	
For limited installation space						●	●

Available options for BM Carriages

Details see chapter 2

Accuracy

- G0 Highly accurate
- G1 Very accurate
- G2 Accurate
- G3 Standard

Preload

- V0 Very low
- V1 Low
- V2 Medium
- V3 High

Reference side

- R1 Ref. at bottom
- R2 Ref. on top

Coating

- CN None
- CH Hard chromium

Lube connections

- S10 Left center
- S20 Right center
- S11 Top left
- S21 Top right
- S12 Lower left side
- S22 Lower right side
- S13 Upper left side
- S23 Upper right side
- S32 Left side
- S42 Right side

Lubrication

- LN Oil protect
- LG Grease protect
- LV Full greasing

Available accessories for MR Carriages

Details see chapter 4.3 und 2.1

Additional wipers
Front plates
Bellows
Lube nippels
Assembly rails
Lube adapters
Lubrication plates

BZ S 25 Drawings

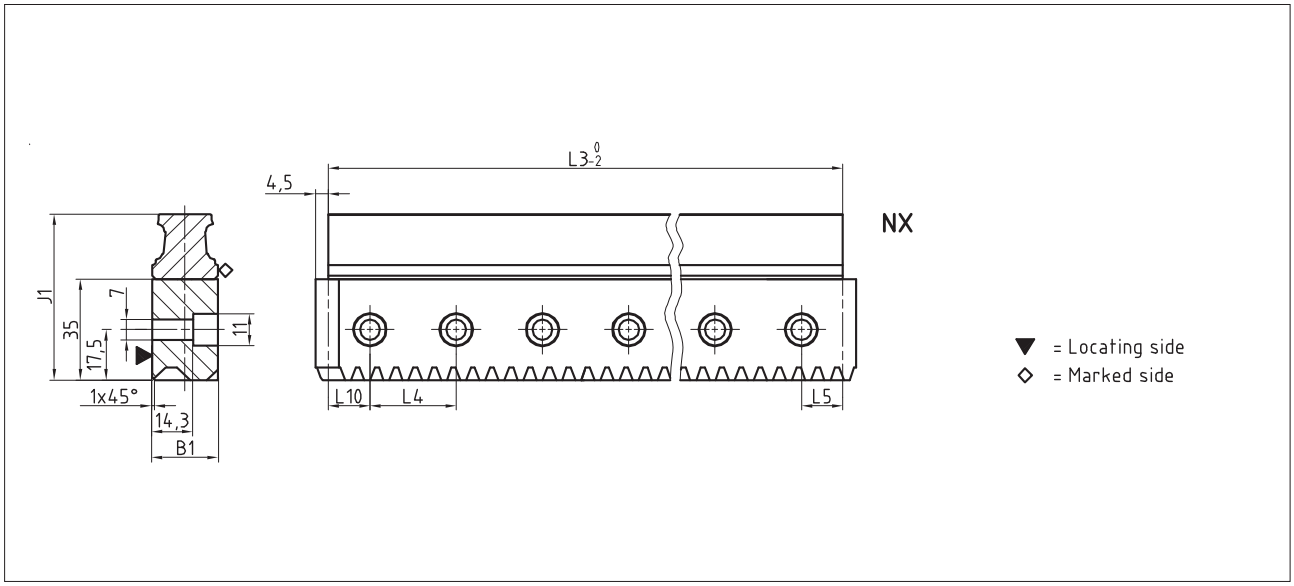

BM W 25 Drawings – BZ

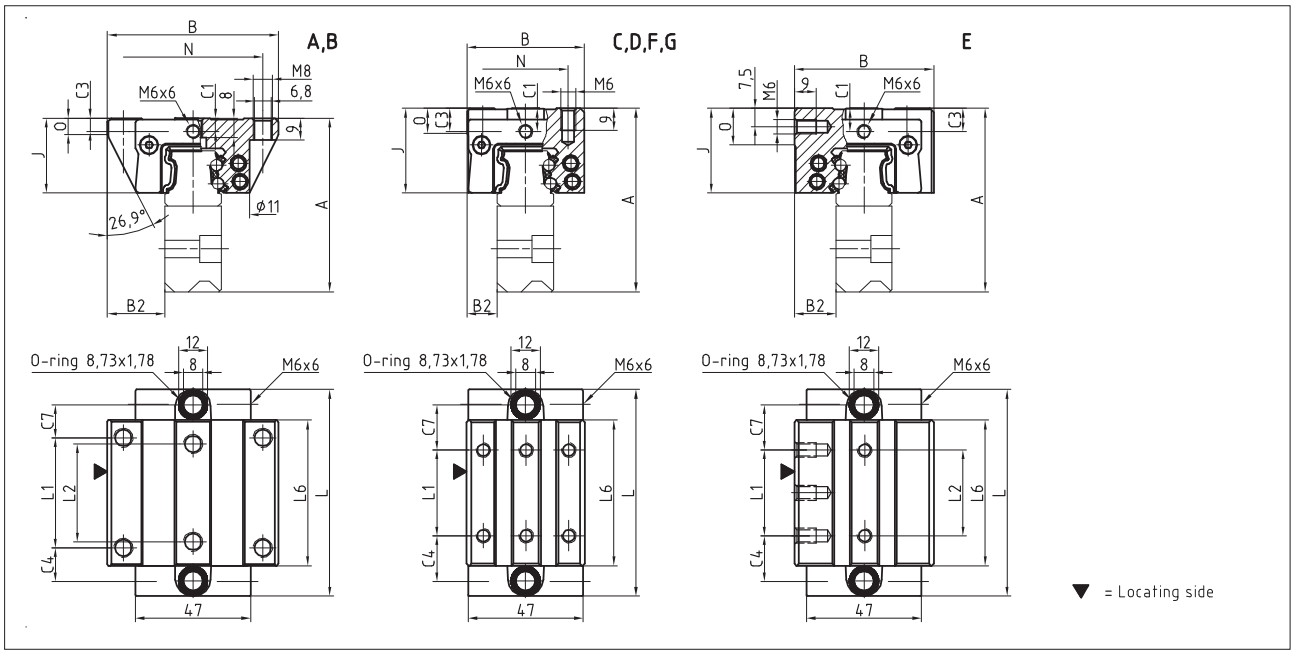

BM W 25 Rigidity diagram

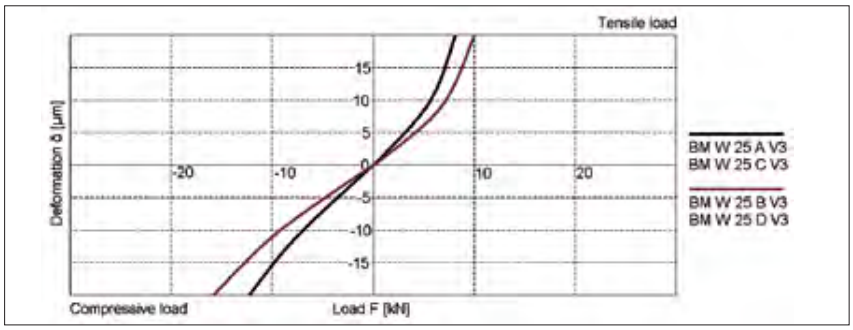

BM W 25 Load rating

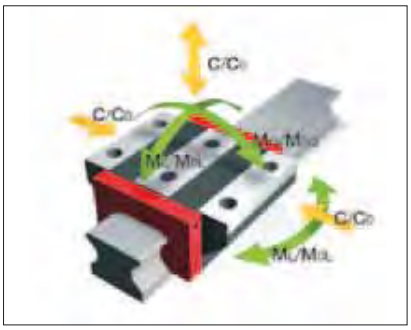

BZ S 25 Dimensions

	BZ S 25-NX						
B1: Rail width	23						
J1: Rail height	57.7						
L3: Rail length max.	6000						
L4: Spacing of fixing holes	30						
L5/L10: Position of first/last fixing hole	15						
m: Modul	2						
α: Helix angle	19°31‘42“						
Gew.: Rail weight, specific (kg/m)	8.9						

Available options for BZ S 25

BM W 25 Dimensions and capacities

	BM W 25-A	BM W 25-B	BM W 25-C	BM W 25-D	BM W 25-E	BM W 25-F	BM W 25-G
A: System height	71	71	75	75	75	71	71
B: Carriage width	70	70	48	48	57	48	48
B2: Distance between locating faces	23.5	23.5	12.5	12.5	17	12.5	12.5
C1: Position of center front lube hole	5.5	5.5	9.5	9.5	9.5	5.5	5.5
C3: Position of lateral lube hole	5.5	5.5	9.5	9.5	9.5	5.5	5.5
C4: Position of lateral lube hole	13.75	23.25	18.75	20.75	18.75	18.75	20.75
C7: Position of top lube hole	13.5	23	18.5	20.5	18.5	18.5	20.5
J: Carriage height	30.5	30.5	34.5	34.5	34.5	30.5	30.5
L: Carriage length	84.5	103.5	84.5	103.5	84.5	84.5	103.5
L1: Exterior fixing hole spacing	45	45	35	50	35	35	50
L2: Interior fixing hole spacing	40	40	-	-	35	-	-
L6: Steel body length	59.5	78.5	59.5	78.5	59.5	59.5	78.5
N: Lateral fixing hole spacing	57	57	35	35	-	35	35
O: Reference face height	7	7	11	11	15	7.1	7.1
Capacities and weights							
C0: Static load capacitiy (N)	46100	60300	46100	60300	46100	46100	60300
C100: Dynamic load capacity (N)	21100	25500	21100	25500	21100	21100	25500
M0Q: Static cross moment capacity (Nm)	631	825	631	825	631	631	825
M0L: Static longitud. moment capacity (Nm)	513	836	513	863	513	513	863
MQ: Dyn. cross moment capacity (Nm)	289	349	289	349	289	289	349
ML: Dyn. longitud. moment capacity (Nm)	235	365	235	365	235	235	365
Gew: Carriage weight (kg)	0.7	0.9	0.6	0.8	0.7	0.6	0.7

Available options for BM W 25

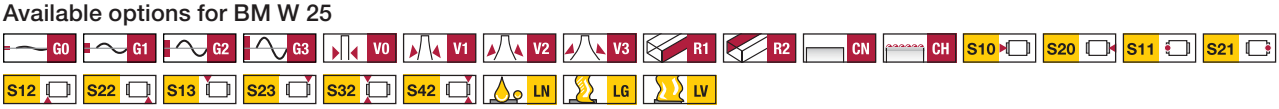

BZ S 35 Drawings

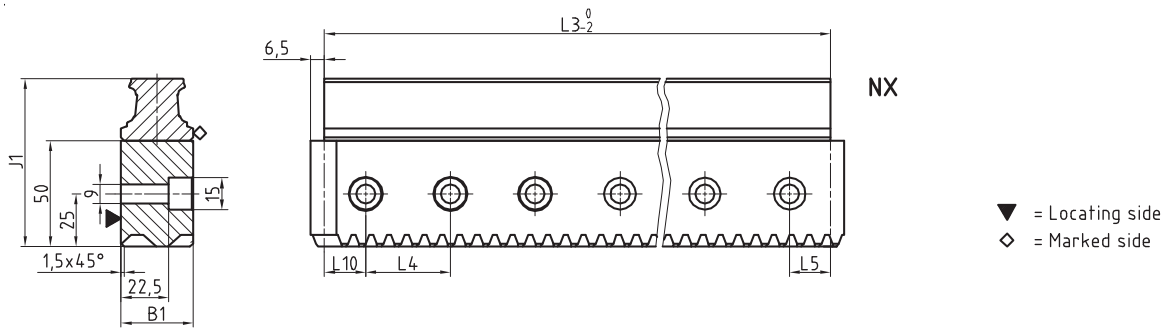

BM W 35 Drawings – BZ

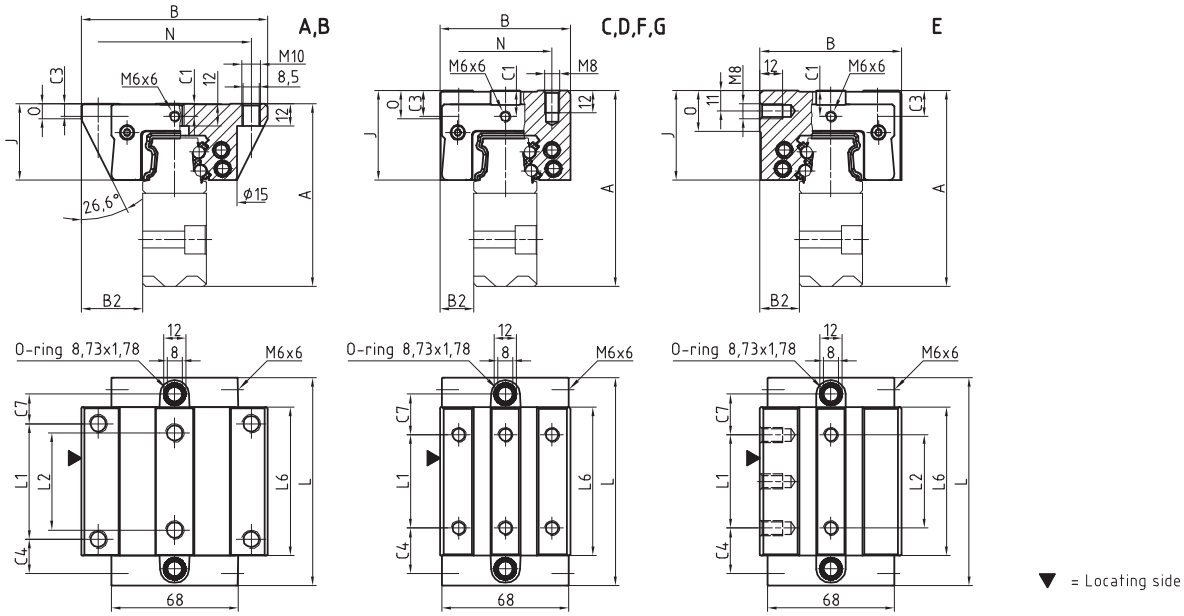

BM W 35 Rigidity diagram

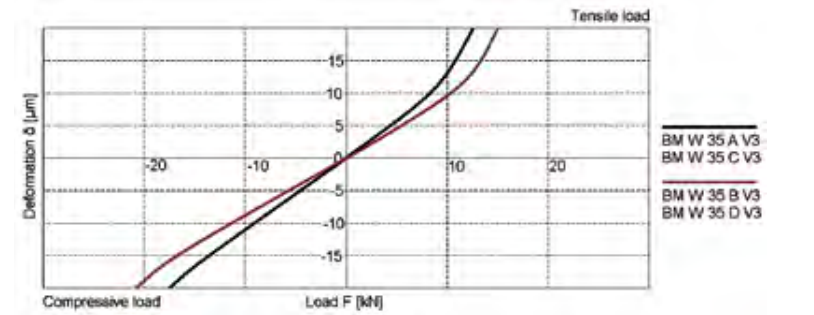

BM W 35 Load rating

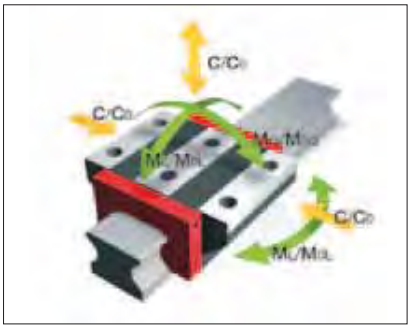

BZ S 35 Dimensions

	BZ S 35-NX						
B1: Rail width	34						
J1: Rail height	79.5						
L3: Rail length max.	6000						
L4: Spacing of fixing holes	40						
L5/L10: Position of first/last fixing hole	20						
m: Modul	2.5						
α: Helix angle	19°31‘42“						
Gew.: Rail weight, specific (kg/m)	17.9						

Available options for BZ S 35

BM W 35 Dimensions and capacities

	BM W 35-A	BM W 35-B	BM W 35-C	BM W 35-D	BM W 35-E	BM W 35-F	BM W 35-G
A: System height	98	98	105	105	105	98	98
B: Carriage width	100	100	70	70	76	70	70
B2: Distance between locating faces	33	33	18	18	21	18	18
C1: Position of center front lube hole	7	7	14	14	14	7	7
C3: Position of lateral lube hole	7	7	14	14	14	7	7
C4: Position of lateral lube hole	18.3	31.05	24.3	26.05	24.3	24.3	26.05
C7: Position of top lube hole	15.8	28.55	21.8	23.55	21.8	21.8	23.55
J: Carriage height	41	41	48	48	48	41	41
L: Carriage length	111.6	137.1	111.6	137.1	111.6	111.6	137.1
L1: Exterior fixing hole spacing	62	62	50	72	50	50	72
L2: Interior fixing hole spacing	52	52	-	-	50	-	-
L6: Steel body length	79.6	105.1	79.6	105.1	79.6	79.6	105.1
N: Lateral fixing hole spacing	82	82	50	50	-	50	50
O: Reference face height	8	8	15	15	22	8	8
Capacities and weights							
C0: Static load capacitiy (N)	84400	110300	84400	110300	84400	84400	110300
C100: Dynamic load capacity (N)	38700	46700	38700	46700	38700	38700	46700
M0Q: Static cross moment capacity (Nm)	1566	2048	1566	2048	1566	1566	2048
M0L: Static longitud. moment capacity (Nm)	1252	2104	1252	2104	1252	1252	2104
MQ: Dyn. cross moment capacity (Nm)	718	867	718	867	718	718	867
ML: Dyn. longitud. moment capacity (Nm)	574	891	574	891	574	574	891
Gew: Carriage weight (kg)	1.8	2.3	1.7	2.2	1.9	1.4	1.8

Available options for BM W 35

BZ Rails accessories overview

Accessories	BZ S 25	BZ S 35
Plugs:		
Plastic plugs	BRK 25	BRK 35
Pinions::		
Pinion with through bore	BZR 25-...	BZR 35-...
Pinion with through bore and keyway	BZR 25-...-K	BZR 35-...-K
Pinion with shaft	BZR 25-S-...	BZR 35-S-...
Pinion with shaft and keyway	BZR 25-S-...-K	BZR 35-S-...-K
Others:		
Lubricating pinion	BZR 25-L-...-K	BZR 35-L-...
Pinion hub for lubricating pinion	BZR 25-LN	BZR 35-LN
Assembly fixture for BZ systems	BZM 25-.....	BZM 35-.....

BM Carriages accessories overview

Accessories	BM W 25	BM W 35
Additional wipers:		
Additional wipers NBR	ZBN 25-U	ZBN 35-U
Additional wipers Viton	ZBV 25-U	ZBV 35-U
Metal wiper	ABM 25	ABM 35
Bellows:		
Bellows	FBB 25	FBB 35
Adapter plate for bellows (spare part)	ZPB 25	ZPB 35
End plate for bellows (spare part)	EPB 25	EPB 35
Assembly rails:		
Assembly rail	MBM 25	MBM 35
Lubrication plates:		
Lubrication plate	SPL 25-BM	SPL 35-BM
Front plates:		
Cross wiper for front plate (spare part)	QAS 25-STB	QAS 35-STB
Lube nippels:		
Hydraulic-type grease nipple straight	SN 6	SN 6
Hydraulic-type grease nipple 45°	SN 6-45	SN 6-45
Hydraulic-type grease nipple 90°	SN 6-90	SN 6-90
Flush type grease nipple M3	-	-
Flush type grease nipple M6	SN 6-T	SN 6-T
Grease gun for SN 3-T und SN 6-T	SFP-T3	SFP-T3
Lube adapters:		
Straight screw-in connection M3	-	-
Lubrication adapter M8 round-head	SA 6-RD-M8	SA 6-RD-M8
Lubrication adapter M8 hexagon head	-	SA 6-6KT-M8
Lubrication adapter G1/8 hexagon head	-	SA 6-6KT-G1/8
Swivel screw connection for pipe d=4 mm	SV 6-D4	SV 6-D4
Swivel screw connection M6	SV 6-M6	SV 6-M6
Swivel screw connection M6 long	SV 6-M6-L	SV 6-M6-L
Swivel screw connection M8	SV 6-M8	SV 6-M8
Swivel screw connection M8 long	SV 6-M8-L	SV 6-M8-L

BZ Rails accessory details

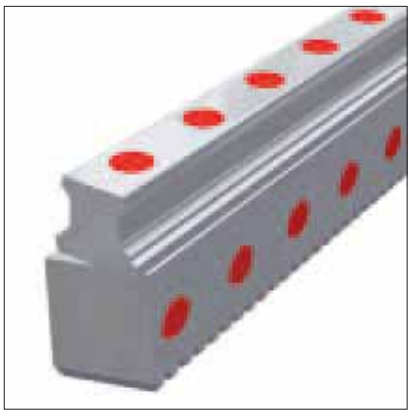

Plastic plugs
If required, the attachment holes on the sides of BZ rails can be closed with BRK plastic plugs. However, this is not essential as the holes are located outside the carriage's area of movement.

Scope of supply: Pack of 25 pcs

Order code: **BRK xx**
xx = Size, sample order: 3 x BRK 25 (75 pcs)

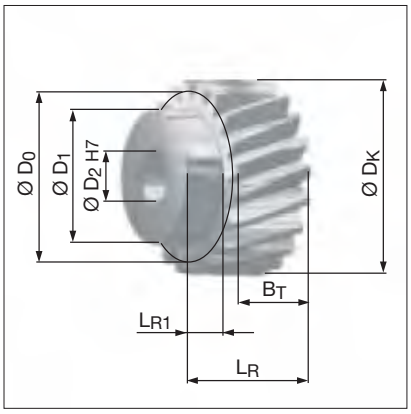

Pinion with through bore
The pinion has hardened and ground helical teeth in quality 6. The bore is soft and can be machined by customers to suit their individual requirements.
This pinion is also available with a keyway (see next paragraph).
For dimensions, please refer to the BZR xx columns in the table of dimensions.

Order code:
Size 25: **BZR 25-2.0-20-S6**
Size 35: **BZR 35-2.5-20-S6**

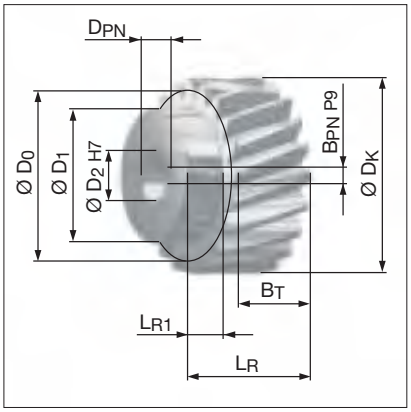

Pinion with through bore and keyway
This pinion is similar to the pinion with a through bore but also has a keyway to specification DIN 6885-A to facilitate its attachment to a drive shaft.
For dimensions, please refer to the BZR xx-K columns in the table of dimensions.

Order code:
Size 25: **BZR 25-2.0-20-S6-K**
Size 35: **BZR 35-2.5-20-S6-K**

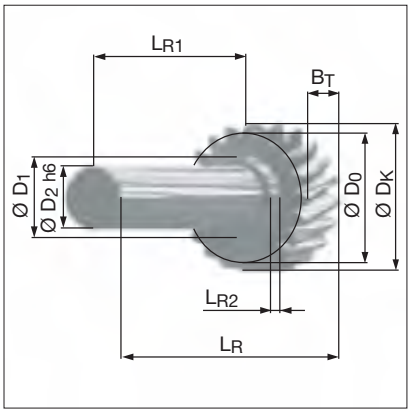

Pinion with shaft
This pinion with hardened and ground helical teeth in quality 6 has a plain shaft. This is left unhardened to permit subsequent machining.
This pinion is also available with a keyway (see next paragraph).
For dimensions, please refer to the BZR xx-S columns in the table of dimensions.

Order code:
Size 25: **BZR 25-S-2.0-20-S6**
Size 35: **BZR 35-S-2.5-20-S6**

BZ Rails accessory details

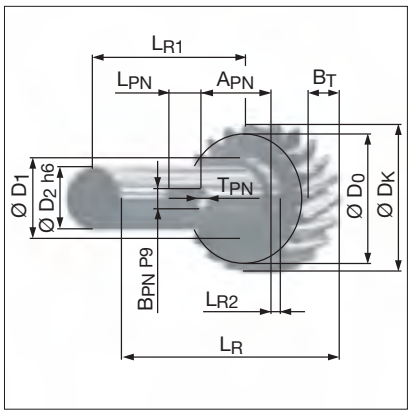

Pinion with shaft and keyway

This pinion is similar to the pinion with a shaft, but also has a keyway to specification DIN 6885-A for attachment.
For dimensions, please refer to the BZR xx-S-K columns in the table of dimensions.

Order code:
Size 25: **BZR 25-S-2.0-20-S6-K**
Size 35: **BZR 35-S-2.5-20-S6-K**

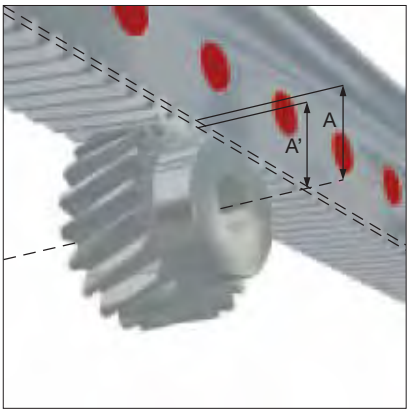

Measure A und A‘

Dimension table pinions

	BZR 25	BZR 35	BZR 25-K	BZR 35-K	BZR 25-S	BZR 35-S	BZR 25-S-K	BZR 35-S-K
z: Number of teeth	20	20	20	20	20	20	20	20
m: Module	2.0	2.5	2.0	2.5	2.0	2.5	2.0	2.5
α: Helix angle	19°31‘42“	19°31‘42“	19°31‘42“	19°31‘42“	19°31‘42“	19°31‘42“	19°31‘42“	19°31‘42“
A: Distance axis - reference circle	21.22	26.53	21.22	26.53	21.22	26.53	21.22	26.53
A‘: Distance axis - tooth crest of rack	19.22	24.03	19.22	24.03	19.22	24.03	19.22	24.03
BT: Tooth width	20	25	20	25	20	25	20	25
DK: Outside diameter	46.44	58.05	46.44	58.05	46.44	58.05	46.44	58.05
D0: Reference diameter	42.44	53.05	42.44	53.05	42.44	53.05	42.44	53.05
D1: Shoulder diameter	35	40	35	40	32	32	32	32
D2: Bore / shaft diameter	15	15	15	15	25	25	25	25
LR: Total length	30	37	30	37	140	145	140	145
LR1: Shaft length	10	12	10	12	120	120	120	120
LR2: Shoulder length	-	-	-	-	8	8	8	8
APN: Keyway distance	-	-	-	-	-	-	43.5	43.5
BPN: Keyway width	-	-	5	5	-	-	8	8
DPN: Diameter of bore with keyway	-	-	17.3	17.3	-	-	-	-
LPN: Keyway length	-	-	-	-	-	-	25	25
TPN: Keyway depth	-	-	-	-	-	-	4	4

BZ Rails accessory details

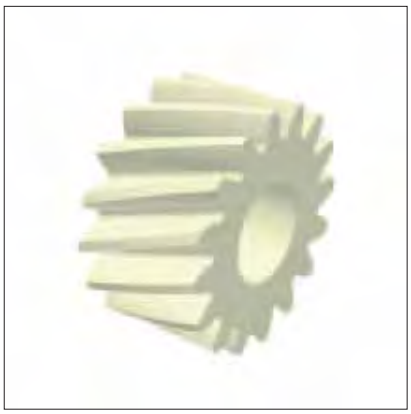

Lubricating pinion
Felt lubricating pinions are available to lubricate the racks. These can be supplied with oil either manually or with an automatic lubrication system.

Order code:
Size 25: **BZR 25-L-2.0-16-S**
Size 35: **BZR 35-L-2.5-16-S**

Pinion hub for lubricating pinion
Pinion hubs are used in combination with lubricating pinions. Lubricating oil can be fed through the hub to the felt pinion through via a special arrangement of lubricating channels.

Order code:
Size 25: **BZR 25-LN**
Size 35: **BZR 35-LN**

Assembly fixture for BZ systems
An assembly fixture is available for the alignment of butt-jointed BZ rails. It consists of a rack segment designed to match BZ teeth. During assembly, the segment is inserted into the racks on both sides of the butt joint which connects and aligns them precisely.

Order code:
Size 25: **BZM 25-2.0-7-S5**
Size 35: **BZM 35-2.5-6-S5**

6.4 Order key

Individual guide rails and carriages are ordered in accordance with the order codes described below.
All MONORAIL BM carriages can be used with BZ rails.
Q.v. chapter 2.1, chapter 4.3 and 6.3 for the order key for accessories.
Separate order codes are used in each case for rails, carriages and accessories. This also applies to different versions of rails and carriages.
All guide components are supplied individually as standard, i.e. unassembled.
If required, SCHNEEBERGER can also supply rails and carriages assembled incl. accessories as complete systems. Please note the ordering instructions in chapter 2.4 if this applies.

Order code for BZ Rails

	2x	BZ S	25	-Q6S	-R1	-960	-15	-15	-CN
Quantity									
Rail									
Size									
Toothing quailty									
Reference side									
Rail length L3									
Position of first fixing hole L5									
Position of last fixing hole L10									
Coating									

NB

Q.v. chapter 6.1 to 6.3 for an overview of types, details of shapes, available options and accessories.
Q.v. chapter 2 for a description of the options.
If possible, standard lengths are preferred for L3 rail length.
These are calculated with the table values in chapter 6.2 using the following formula: $L3 = n \times L4 + L5 + L10 \leqslant L3max$.

Order code for BM Carriages

	4x	BM W	25	-A	-G3	-V1	-R1	-CN	-S10	-LN
Quantity										
Carriage										
Size										
Type										
Accuracy										
Preload										
Reference side										
Coating										
Lube connection										
Lubrication as delivered condition										

NB

Q.v. chapter 6.1 to 6.3 for an overview of types, details of shapes, available options and accessories.
Q.v. chapter 2 for a description of the options.

7.0 MONORAIL AMS 3B

SCHNEEBERGER's MONORAIL AMS 3B is an integrated linear encoder system for use on all protected machine tool axes with high demands on system precision. Mechanically the AMS 3B is based on SCHNEEBERGER's MONORAIL MR roller guide with lengths up to 6 metres. The integration of the measurement system allows very compact axes to be put together.
A digital interface with a range of different resolutions for different maximum speeds, and an analog 1Vss (200 µm signal period) interface are available as interfaces with the control system. Reference marks can be set at 50mm intervals or distance coded. Different options for carriage lubrication and sealing permit the best possible degree of adaptation to application requirements. The easily interchangeable reading head is identical for all sizes.

Features of System MONORAIL AMS 3B

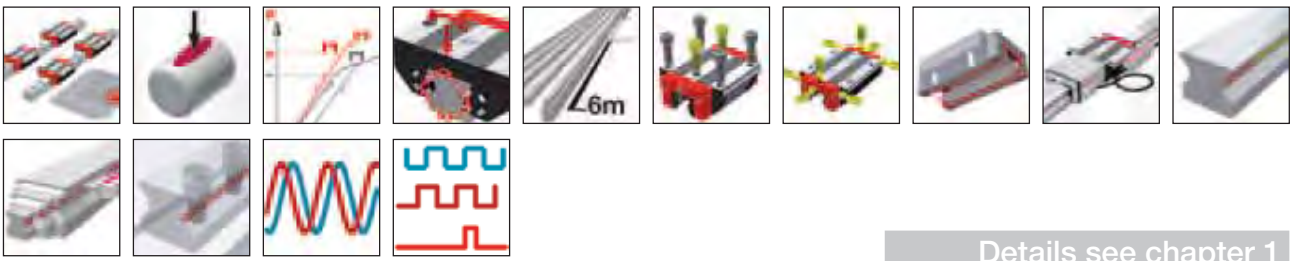

Details see chapter 1

7.1 Overview of types, sizes and available options

7.2 Technical data and options

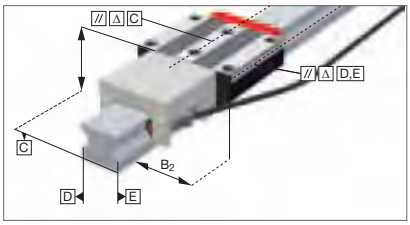

7.3 Accessories MONORAIL AMS 3B

7.4 Order key

Product overview AMS 3B Rails


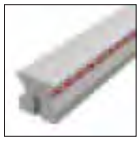
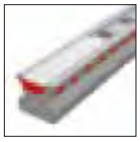

Buildsizes / Rail build forms	N standard	NU with tapped holes at the bottom	C for cover strip				
Size 25	AMS 3B S 25-N	AMS 3B S 25-NU	AMS 3B S 25-C				
Size 35	AMS 3B S 35-N	AMS 3B S 35-NU	AMS 3B S 35-C				
Size 45	AMS 3B S 45-N	AMS 3B S 45-NU	AMS 3B S 45-C				
Size 55	AMS 3B S 55-N	AMS 3B S 55-NU	AMS 3B S 55-C				
Size 65	AMS 3B S 65-N	AMS 3B S 65-NU	AMS 3B S 65-C				
Features							
Screwable from above	●		●				
Screwable from below		●					
Small assembly effort		●	●				
Great single-part system length	●	●	●				

Available options for AMS 3B Rails

Details see chapter 2

Accuracy

- G0 Highly accurate
- G1 Very accurate
- G2 Accurate
- G3 Standard

Straightness

- KC Standard

Coating

- CN None
- CH Hard chromium

Locating sides

- R11 Ref.bottom, scale bottom
- R12 Ref.bottom, scale bottom
- R21 Ref.top, scale bottom
- R22 Ref.top, scale top

Magnetization

- TR50 50 mm pattern
- TD20 20 mm code
- TD50 50 mm code

Available accessories for AMS 3B Rails

Details see chapter 3.3

Plugs

Cover strips

Assembly tools

7.1 Overview of types, sizes and available options AMS 3B Carriages

Product overview AMS 3B Carriages

Buildsizes / Carriage build forms	A standard	B standard, long	C compact, high	D compact, high, long	E compact, high, for lateral fixing	F compact	G compact, long
Size 25	AMS 3B W 25-A	AMS 3B W 25-B	AMS 3B W 25-C	AMS 3B W 25-D	AMS 3B W 25-E	AMS 3B W 25-F	AMS 3B W 25-G
Size 35	AMS 3B W 35-A	AMS 3B W 35-B	AMS 3B W 35-C	AMS 3B W 35-D	AMS 3B W 35-E		
Size 45	AMS 3B W 45-A	AMS 3B W 45-B	AMS 3B W 45-C	AMS 3B W 45-D		AMS 3B W 45-F	
Size 55	AMS 3B W 55-A	AMS 3B W 55-B	AMS 3B W 55-C	AMS 3B W 55-D			AMS 3B W 55-G
Size 65	AMS 3B W 65-A	AMS 3B W 65-B	AMS 3B W 65-C	AMS 3B W 65-D			
Features							
Screwable from above	●	●	●	●		●	●
Screwable from below	●	●					
Screwable from the side					●		
For high loads and moments		●		●			●
For medium loads and moments	●		●		●	●	
For limited installation space						●	●

Available options for AMS 3B Carriages

Details see chapter 2

Accuracy
- G0 Highly accurate
- G1 Very accurate
- G2 Accurate
- G3 Standard

Preload
- V1 Low
- V2 Medium
- V3 High

Reference side
- R1 Ref. at bottom
- R2 Ref. on top

Coating
- CN None
- CH Hard chromium

Lube connections
- S10 Left center
- S20 Right center
- S11 Top left
- S21 Top right
- S12 Lower left side
- S22 Lower right side
- S13 Upper left side
- S23 Upper right side
- S32 Left side
- S42 Right side

Lubrication
- LN Oil protect
- LG Grease protect
- LV Full greasing

Interface
- TMU TMU, analog, 0.3m
- TRU TRU, analog, 3m
- TSU TSU, analog, 3m
- TMD TMD, digital, 0.3m
- TRD TRD, digital, 3m
- TSD TSD, digital, 3m

Reading head position
- P1 Right top
- P3 Left bottom

Available accessories for AMS 3B Carriages

Details see chapter 2.1 and 3.3

Additional wipers
Front plates
Bellows
Lube nippels
Assembly rails
Lube adapters
Lubrication plates
Cables

AMS 3B S 25 Drawings

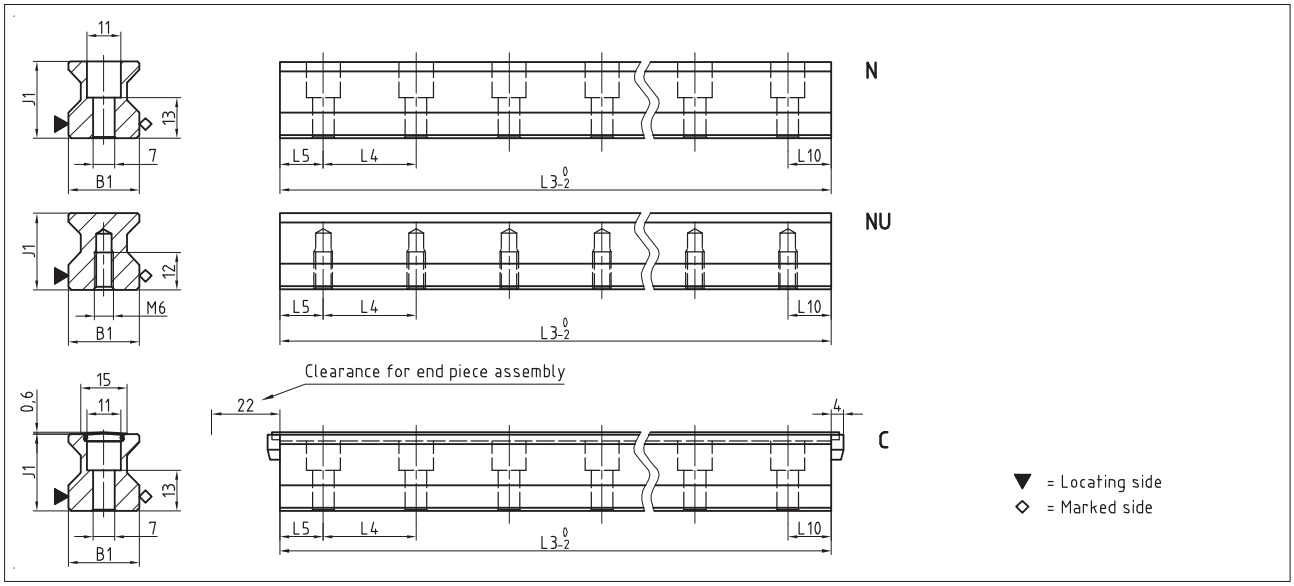

AMS 3B W 25 Drawings

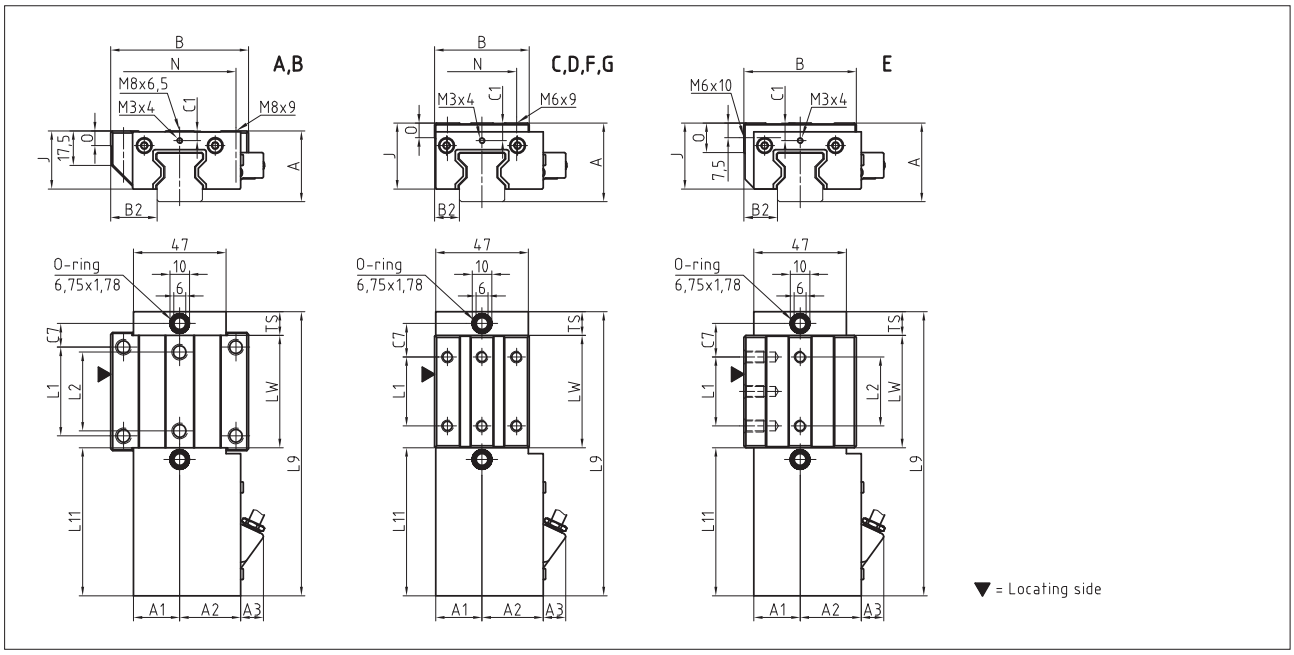

AMS 3B W 25 Rigidity diagram

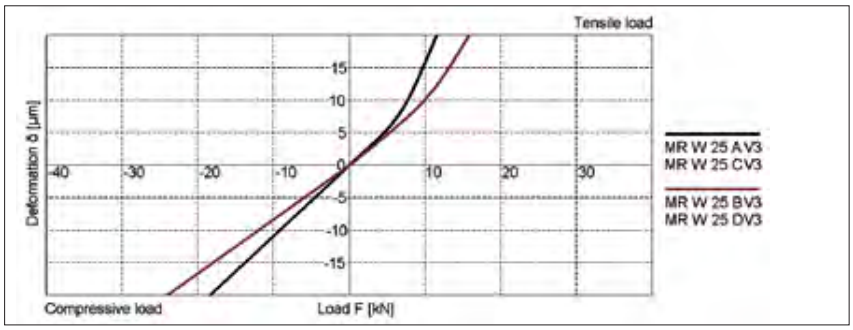

AMS 3B W 25 Load rating

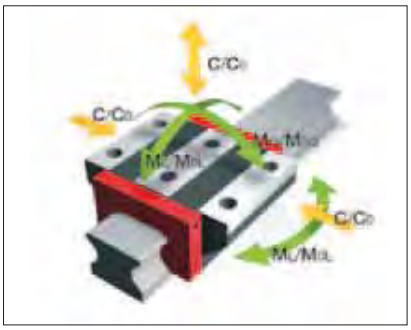

7.2 Technical data and options AMS 3B Size 25

AMS 3B S 25 Dimensions



	AMS 3B S 25-N	AMS 3B S 25-NU	AMS 3B S 25-C				
B1: Rail width	23	23	23				
J1: Rail height	24.5	24.5	24.5				
L3: Rail length max.	6000	6000	3000				
L4: Spacing of fixing holes	30	30	30				
L5/L10: Position of first/last fixing hole	13.5	13,5	13.5				
Gew.: Rail weight, specific (kg/m)	3.4	3.8	3.3				

Available options for AMS 3B S 25

AMS 3B W 25 Dimensions and capacities

	AMS 3B W 25-A	AMS 3B W 25-B	AMS 3B W 25-C	AMS 3B W 25-D	AMS 3B W 25-E	AM 3B W 25-F	AMS 3B W 25-G
A: System height	36	36	40	40	40	36	36
A1: Half width of housing on opposite side	23.5	23.5	23.5	23.5	23.5	23.5	23.5
A2: Half width of housing on reading head side	31	31	31	31	31	31	31
A3: Projection of reading head	11.5	11.5	11.5	11.5	11.5	11.5	11.5
B: Carriage width	70	70	48	48	57	48	48
B2: Distance between locating faces	23.5	23.5	12.5	12.5	17	12.5	12.5
C1: Position of center front lube hole*	5 / 5.5	5 / 5.5	9 / 9.5	9 / 9.5	9 / 9.5	5 / 5.5	5 / 5.5
C3: Position of lateral lube hole	-	-	-	-	-	-	-
C4: Position of lateral lube hole	-	-	-	-	-	-	-
C7: Position of top lube hole	12	23.2	17	20.7	17	17	17
J: Carriage height	29.5	29.5	33.5	33.5	33.5	29.5	29.5
L1: Exterior fixing hole spacing	45	45	35	50	35	35	50
L2: Interior fixing hole spacing	40	40	-	-	35	-	-
L9: Carriage length with housing	144.2	166.6	144.2	166.6	144.2	144.2	166.6
L11: Housing length	75.2	75.2	75.2	75.2	75.2	75.2	75,2
Lw: Inner carriage body length	57	79.4	57	79.4	57	57	79.4
N: Lateral fixing hole spacing	57	57	35	35	-	35	35
O: Reference face height	7.5	7.5	7.5	7.5	15	7.5	7.5
Ts: Front plate thickness	12	12	12	12	12	12	12
Capacities and weights							
C0: Static load capacitiy (N)	49800	70300	49800	70300	49800	49800	70300
C100: Dynamic load capacity (N)	27700	39100	27700	39100	27700	27700	39100
M0Q: Static cross moment capacity (Nm)	733	1035	733	1035	733	733	1035
M0L: Static longitud. moment capacity (Nm)	476	936	476	936	476	476	936
MQ: Dyn. cross moment capacity (Nm)	408	576	408	576	408	408	578
ML: Dyn. longitud. moment capacity (Nm)	265	521	265	521	265	265	521
Gew: Carriage weight (kg)	1.3	1.5	1.2	1.3	1.3	1.1	1.2

Note: * Values valid for external housing / front plate

Available options for AMS 3B W 25

AMS 3B S 35 Drawings

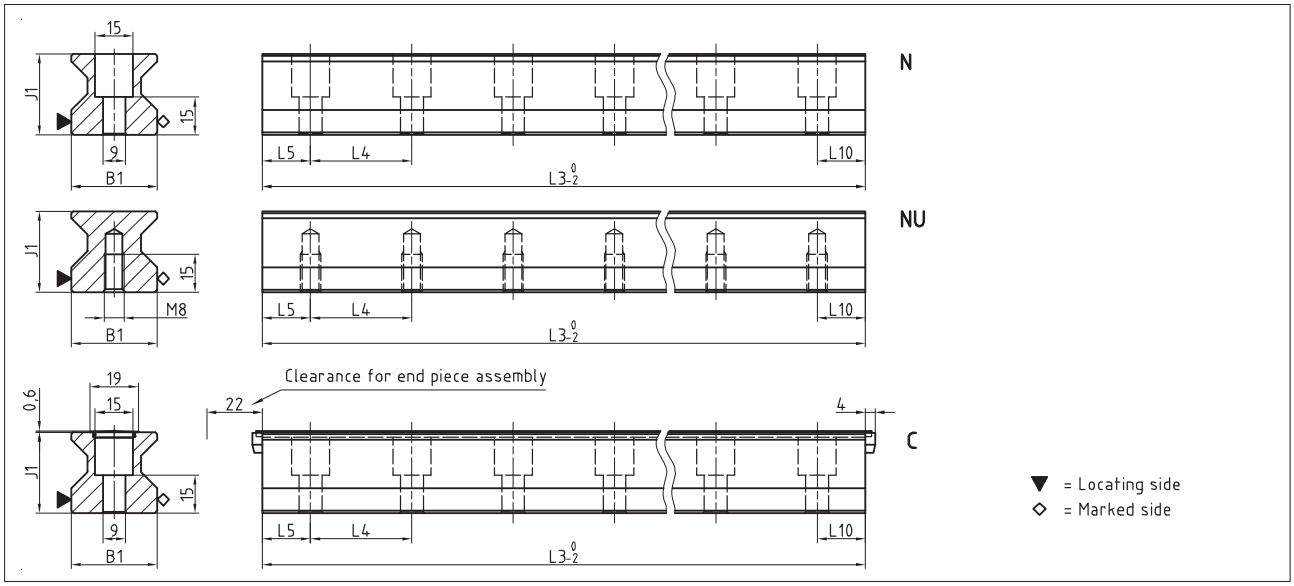

AMS 3B W 35 Drawings

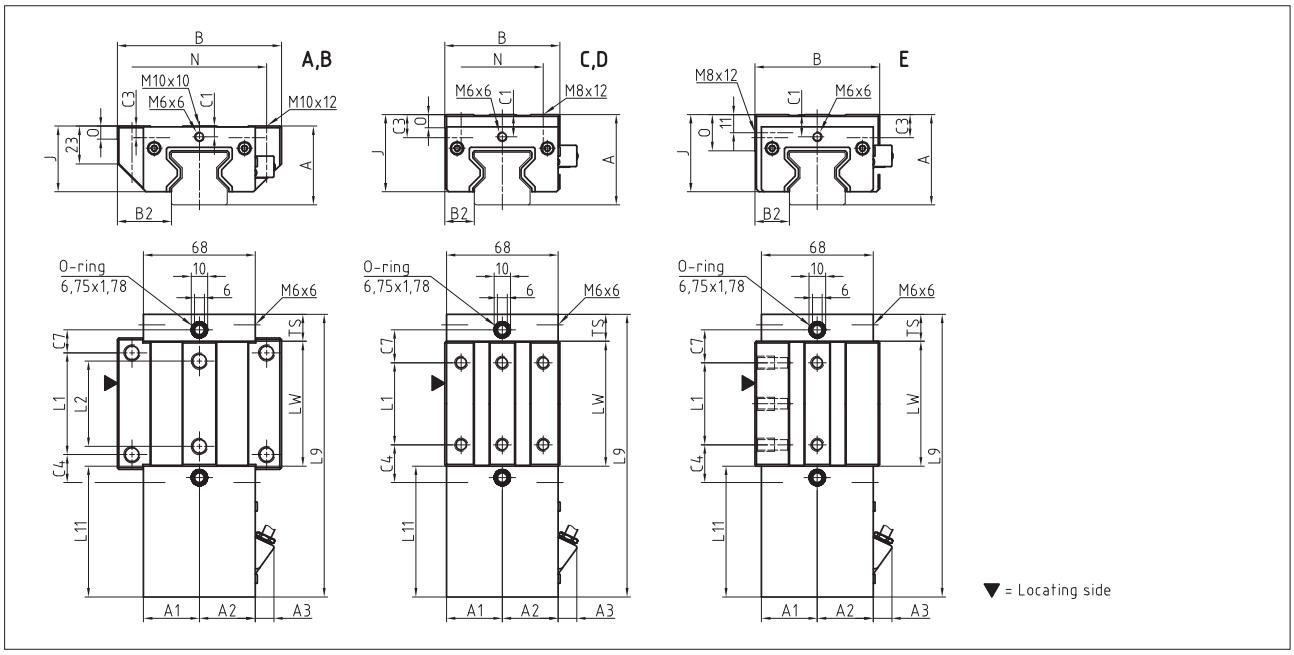

AMS 3B W 35 Rigidity diagram

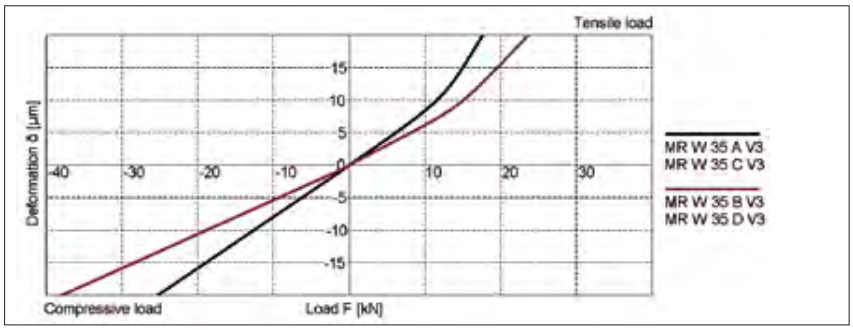

AMS 3B W 35 Load rating

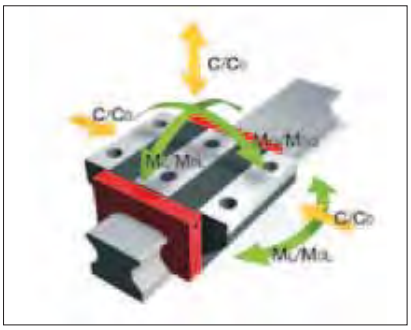

AMS 3B S 35 Dimensions


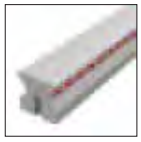
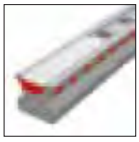

	AMS 3B S 35-N	AMS 3B S 35-NU	AMS 3B S 35-C				
B1: Rail width	34	34	34				
J1: Rail height	32	32	32				
L3: Rail length max.	6000	6000	6000				
L4: Spacing of fixing holes	40	40	40				
L5/L10: Position of first/last fixing hole	18.5	18.5	18.5				
Gew.: Rail weight, specific (kg/m)	6.5	7.1	6.3				

Available options for AMS 3B S 35

AMS 3B W 35 Dimensions and capacities





	AMS 3B W 35-A	AMS 3B W 35-B	AMS 3B W 35-C	AMS 3B W 35-D	AMS 3B W 35-E		
A: System height	48	48	55	55	55		
A1: Half width of housing on opposite side	34	34	34	34	34		
A2: Half width of housing on reading head side	34	34	34	34	34		
A3: Projection of reading head	11.5	11.5	11.5	11.5	11.5		
B: Carriage width	100	100	70	70	76		
B2: Distance between locating faces	33	33	18	18	21		
C1: Position of center front lube hole*	6.5 / 7	6.5 / 7	13.5 / 14	13.5 / 14	13.5 / 14		
C3: Position of lateral lube hole	7	7	14	14	14		
C4: Position of lateral lube hole	17	30.5	23	25.5	23		
C7: Position of top lube hole	14	27.5	20	22.5	20		
J: Carriage height	40	40	47	47	47		
L1: Exterior fixing hole spacing	62	62	50	72	50		
L2: Interior fixing hole spacing	52	52	-	-	50		
L9: Carriage length with housing	172.2	199.2	172.2	199.2	172.2		
L11: Housing length	79.7	79.7	79.7	79.7	79.7		
Lw: Inner carriage body length	76	103	76	103	76		
N: Lateral fixing hole spacing	82	82	50	50	-		
O: Reference face height	8	8	8	8	22		
Ts: Front plate thickness	16.5	16.5	16.5	16.5	16.5		
Capacities and weights							
C0: Static load capacitiy (N)	93400	128500	93400	128500	93400		
C100: Dynamic load capacity (N)	52000	71500	52000	71500	52000		
MOQ: Static cross moment capacity (Nm)	2008	2762	2008	2762	2008		
MOL: Static longitud. moment capacity (Nm)	1189	2214	1189	2214	1189		
MQ: Dyn. cross moment capacity (Nm)	1118	1537	1118	1537	1118		
ML: Dyn. longitud. moment capacity (Nm)	662	1232	662	1232	662		
Gew: Carriage weight (kg)	2.3	2.9	2.2	2.7	2.3		

Note: * Values valid for external housing / front plate

Available options for AMS 3B W 35

AMS 3B S 45 Drawings

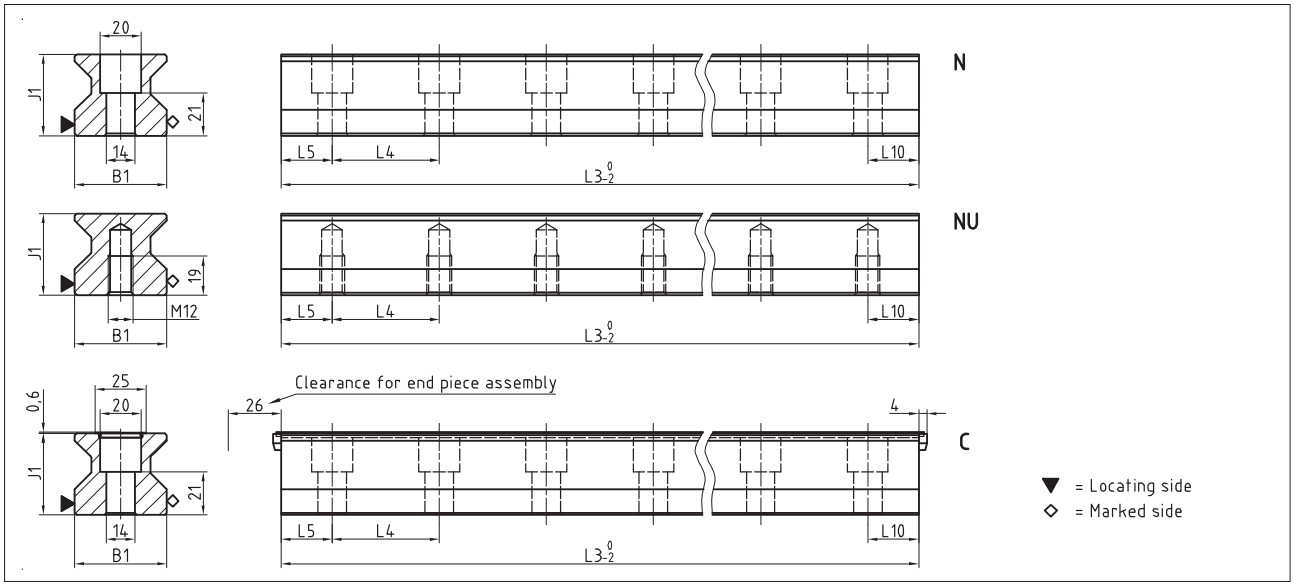

AMS 3B W 45 Drawings

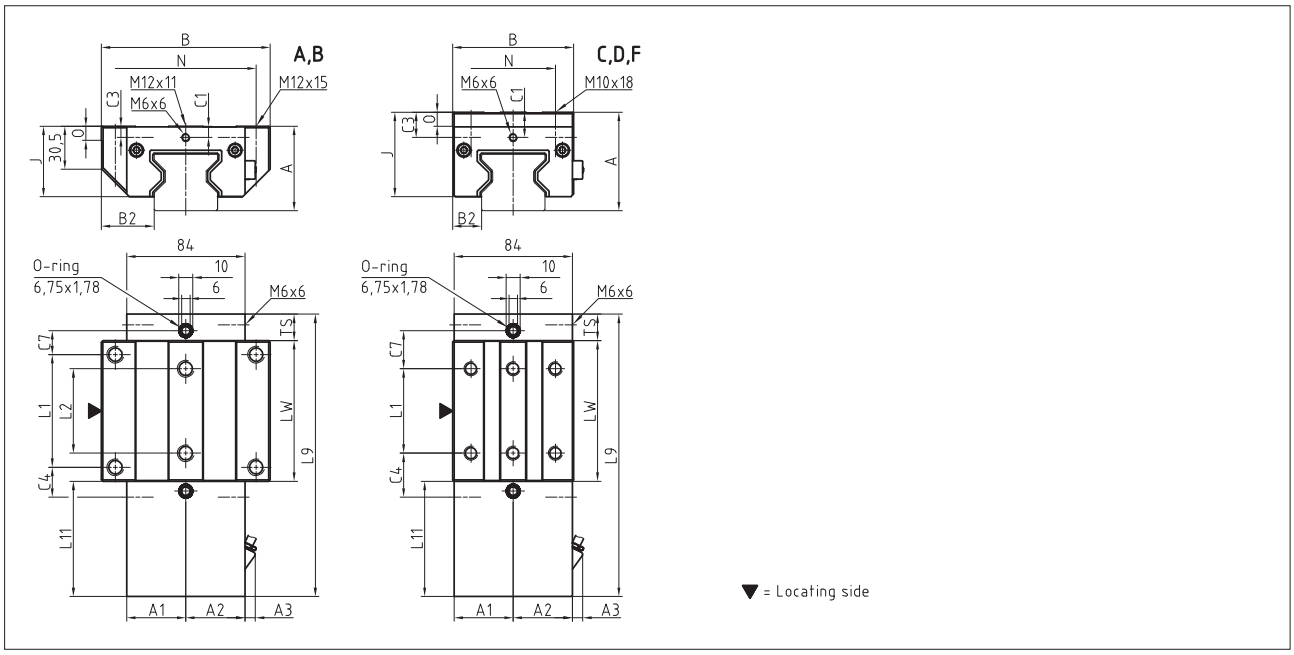

AMS 3B W 45 Rigidity diagram

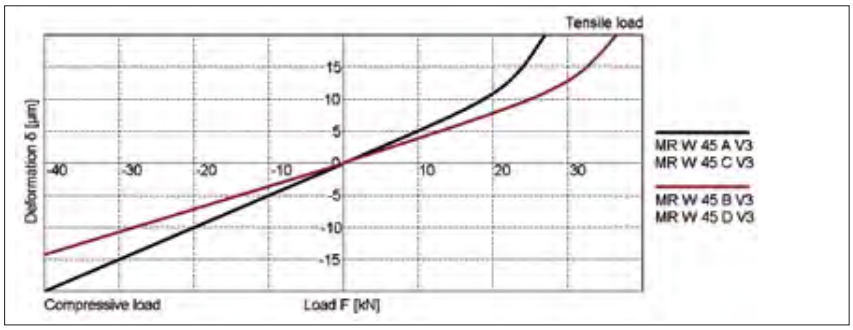

AMS 3B W 45 Load rating

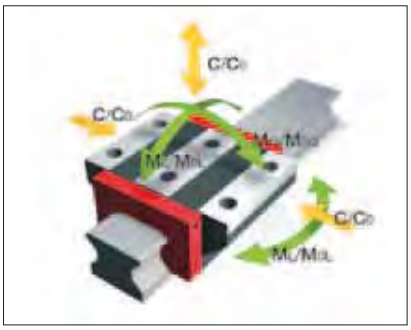

AMS 3B S 45 Dimensions



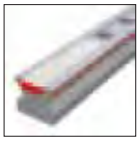

	AMS 3B S 45-N	AMS 3B S 45-NU	AMS 3B S 45-C				
B1: Rail width	45	45	45				
J1: Rail height	40	40	40				
L3: Rail length max.	6000	6000	6000				
L4: Spacing of fixing holes	52.5	52.5	52.5				
L5/L10:Position of first/last fixing hole	25	25	25				
Gew.: Rail weight, specific (kg/m)	10.8	11.8	10.8				

Available options for AMS 3B S 45

AMS 3B W 45 Dimensions and capacities





	AMS 3B W 45-A	AMS 3B W 45-B	AMS 3B W 45-C	AMS 3B W 45-D	AMS 3B W 45-F		
A: System height	60	60	70	70	60		
A1: Half width of housing on opposite side	42	42	42	42	42		
A2: Half width of housing on reading head side	42	42	42	42	42		
A3: Projection of reading head	7.5	7.5	7.5	7.5	7.5		
B: Carriage width	120	120	86	86	86		
B2: Distance between locating faces	37.5	37.5	20.5	20.5	20.5		
C1: Position of center front lube hole	8	8	18	18	8		
C3: Position of lateral lube hole	8	8	18	18	8		
C4: Position of lateral lube hole	21.25	38.75	31.25	38.75	31.25		
C7: Position of top lube hole	17	34.5	27	34.5	27		
J: Carriage height	50	50	60	60	50		
L1: Exterior fixing hole spacing	80	80	60	80	60		
L2: Interior fixing hole spacing	60	60	-	-	-		
L9: Carriage length with housing	200.7	235.7	200.7	235.7	200.7		
L11: Housing length	81.9	81.9	81.9	81.9	81.9		
Lw: Inner carriage body length	100	135	100	135	100		
N: Lateral fixing hole spacing	100	100	60	60	60		
O: Reference face height	10	10	10	10	10		
Ts: Front plate thickness	18.8	18.8	18.8	18.8	18.8		
Capacities and weights							
C0: Static load capacitiy (N)	167500	229500	167500	229500	167500		
C100: Dynamic load capacity (N)	93400	127800	93400	127800	93400		
M0Q: Static cross moment capacity (Nm)	4621	6333	4624	6333	4621		
M0L: Static longitud. moment capacity (Nm)	2790	5161	2790	5161	2790		
MQ: Dyn. cross moment capacity (Nm)	2577	3527	2577	3527	2577		
ML: Dyn. longitud. moment capacity (Nm)	1556	2874	1556	2874	1556		
Gew: Carriage weight (kg)	4.0	5.1	3.8	4.8	3.1		

Available options for AMS 3B W 45

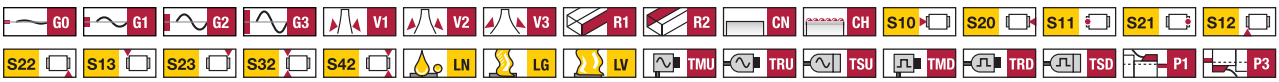

AMS 3B S 55 Drawings

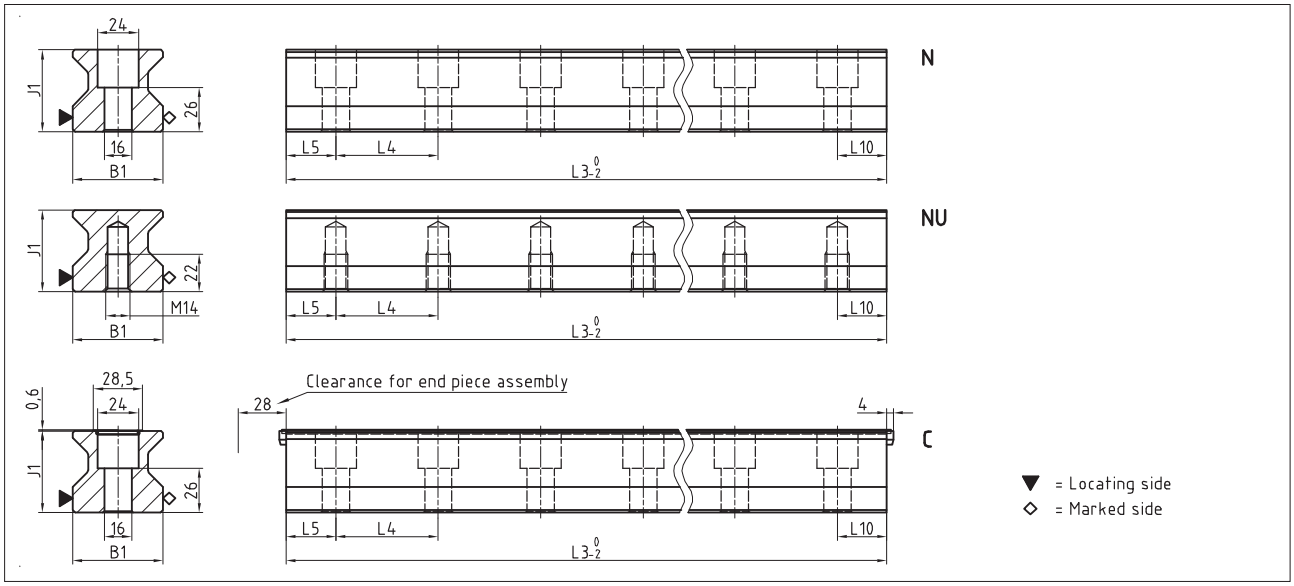

AMS 3B W 55 Drawings

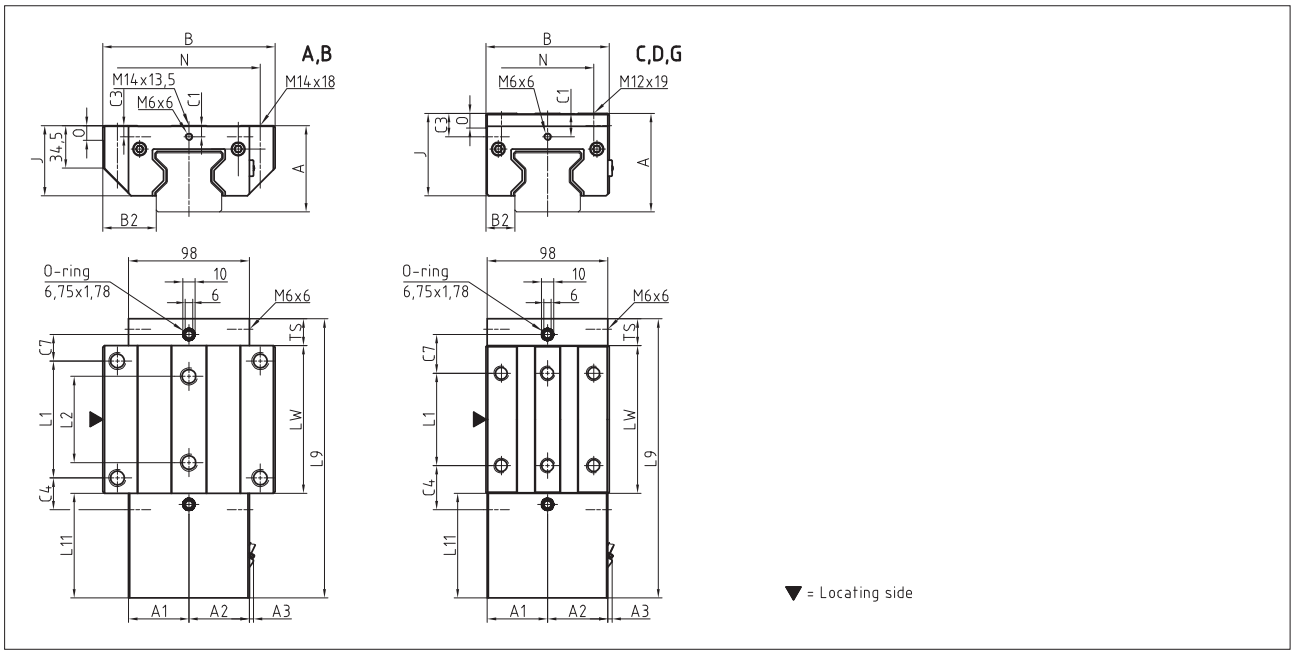

AMS 3B W 55 Rigidity diagram

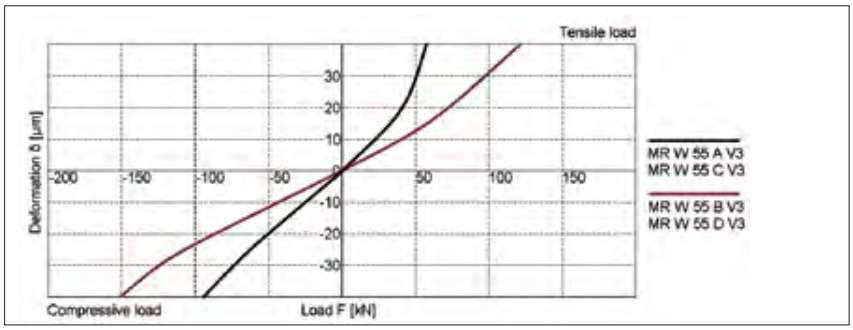

AMS 3B W 55 Load rating

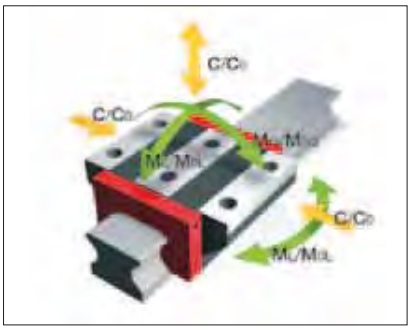

AMS 3B S 55 Dimensions



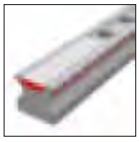

	AMS 3B S 55-N	AMS 3B S 55-NU	AMS 3B S 55-C				
B1: Rail width	53	53	53				
J1: Rail height	48	48	48				
L3: Rail length max.	6000	6000	6000				
L4: Spacing of fixing holes	60	60	60				
L5/L10:Position of first/last fixing hole	28.5	28.5	28.5				
Gew.: Rail weight, specific (kg/m)	15.2	16.6	14.9				

Available options for AMS 3B S 55

AMS 3B W 55 Dimensions and capacities





	AMS 3B W 55-A	AMS 3B W 55-B	AMS 3B W 55-C	AMS 3B W 55-D	AMS 3B W 55-G		
A: System height	70	70	80	80	70		
A1: Half width of housing on opposite side	49	49	49	49	49		
A2: Half width of housing on reading head side	49	49	49	49	49		
A3: Projection of reading head	3.5	3.5	3.5	3.5	3.5		
B: Carriage width	140	140	100	100	100		
B2: Distance between locating faces	43.5	43.5	23.5	23.5	23.5		
C1: Position of center front lube hole	9	9	19	19	9		
C3: Position of lateral lube hole	9	9	19	19	9		
C4: Position of lateral lube hole	25.75	46.75	35.75	46.75	46.75		
C7: Position of top lube hole	21.5	42.5	31.5	42.5	42.5		
J: Carriage height	57	57	67	67	57		
L1: Exterior fixing hole spacing	95	95	75	95	95		
L2: Interior fixing hole spacing	70	70	-	-	-		
L9: Carriage length with housing	226.7	268.7	226.7	268.7	268.7		
L11: Housing length	84.9	84.9	84.9	84.9	84.9		
Lw: Inner carriage body length	120	162	120	162	162		
N: Lateral fixing hole spacing	116	116	75	75	75		
O: Reference face height	12	12	12	12	12		
Ts: Front plate thickness	21.8	21.8	21.8	21.8	21.8		
Capacities and weights							
C0: Static load capacitiy (N)	237000	324000	237000	324000	324000		
C100: Dynamic load capacity (N)	131900	180500	131900	180500	180500		
M0Q: Static cross moment capacity (Nm)	7771	10624	7771	10624	10624		
M0L: Static longitud. moment capacity (Nm)	4738	8745	4325	8745	8745		
MQ: Dyn. cross moment capacity (Nm)	4325	5919	4325	5919	5919		
ML: Dyn. longitud. moment capacity (Nm)	2637	4872	2637	4872	4872		
Gew: Carriage weight (kg)	5.9	7.7	5.5	7.0	5.7		

Available options for AMS 3B W 55

AMS 3B S 65 Drawings

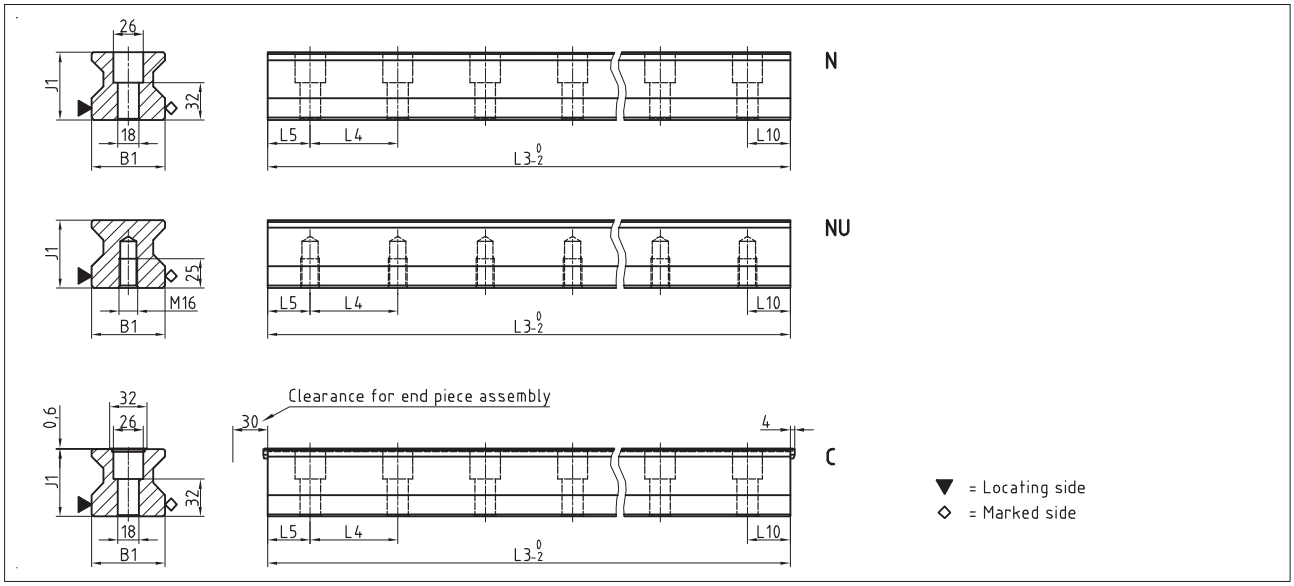

AMS 3B W 65 Drawings

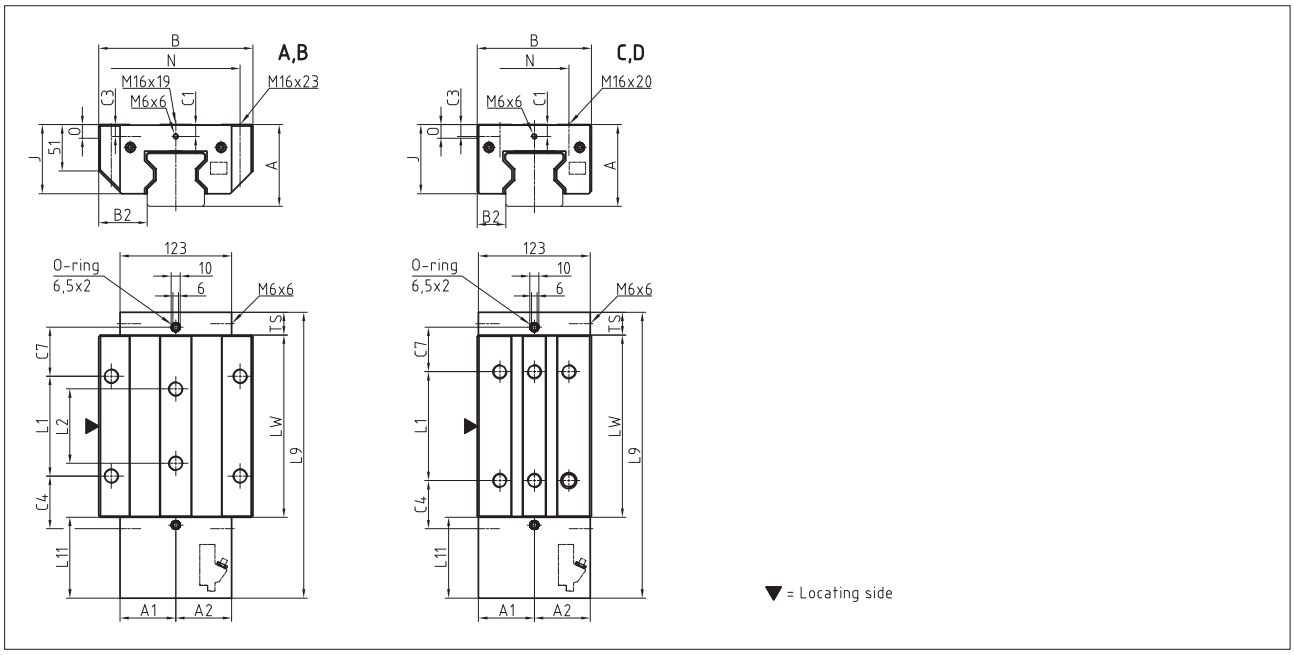

AMS 3B W 65 Rigidity diagram

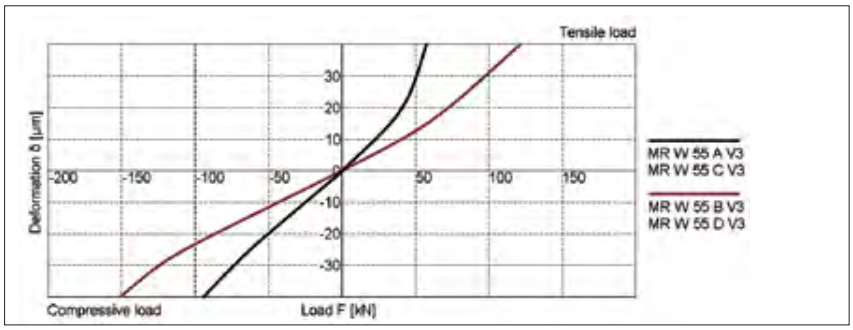

AMS 3B W 65 Load rating

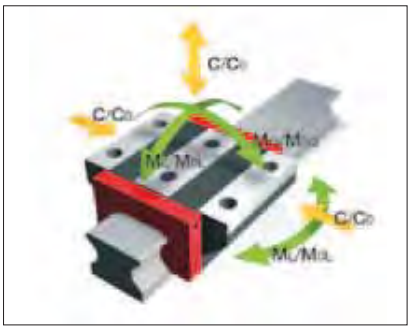

AMS 3B S 65 Dimensions



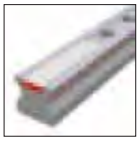

	AMS 3B S 65-N	AMS 3B S 65-NU	AMS 3B S 65-C
B1: Rail width	63	63	63
J1: Rail height	58	58	58
L3: Rail length max.	6000	6000	6000
L4: Spacing of fixing holes	75	75	75
L5/L10: Position of first/last fixing hole	36	36	36
Gew.: Rail weight, specific (kg/m)	22.8	24.5	22.5

Available options for AMS 3B S 65

AMS 3B W 65 Dimensions and capacities




	AMS 3B W 65-A	AMS 3B W 65-B	AMS 3B W 65-C	AMS 3B W 65-D
A: System height	90	90	90	90
A1: Half width of housing on opposite side	61.5	61.5	61.5	61.5
A2: Half width of housing on reading head side	61.5	61.5	61.5	61.5
A3: Projection of reading head	0	0	0	0
B: Carriage width	170	170	126	126
B2: Distance between locating faces	53.5	53.5	31.5	31.5
C1: Position of center front lube hole	13	13	13	13
C3: Position of lateral lube hole	13	13	13	13
C4: Position of lateral lube hole	31.75	58	51.75	53
C7: Position of top lube hole	27.75	54	47.75	49
J: Carriage height	76	76	76	76
L1: Exterior fixing hole spacing	110	110	70	120
L2: Interior fixing hole spacing	82	82	-	-
L9: Carriage length with housing	262.5	315	262.5	315
L11: Housing length	89	89	89	89
Lw: Inner carriage body length	148.5	201	148.5	201
N: Lateral fixing hole spacing	142	142	76	76
O: Reference face height	15	15	15	15
Ts: Front plate thickness	25	25	25	25
Capacities and weights				
C0: Static load capacitiy (N)	419000	530000	419000	530000
C100: Dynamic load capacity (N)	232000	295000	232000	295000
M0Q: Static cross moment capacity (Nm)	16446	20912	16446	20912
M0L: Static longitud. moment capacity (Nm)	10754	17930	10754	17930
MQ: Dyn. cross moment capacity (Nm)	9154	11640	9154	11640
ML: Dyn. longitud. moment capacity (Nm)	5954	9980	5954	9980
Gew: Carriage weight (kg)	11.6	14.9	9.4	11.8

Available options for AMS 3B W 65

AMS 3B Rails accessories overview

Accessories	AMS 3B S 25	AMS 3B S 35	AMS 3B S 45	AMS 3B S 55	AMS 3B S 65
Plugs:					
Plastic plugs	MRK 25	MRK 35	MRK 45	MRK 55	MRK 65
Brass plugs	MRS 25	MRS 35	MRS 45	MRS 55	MRS 65
Steel plugs	MRZ 25	MRZ 35	MRZ 45	MRZ 55	MRZ 65
Cover strips:					
Cover strip (spare part)	MAC 25	MAC 35	MAC 45	MAC 55	MAC 65
End piece for cover strip (spare part)	EST 25-MAC	EST 35-MAC	EST 45-MAC	EST 55-MAC	EST 65-MAC
Assembly tools:					
Installation tool for steel plugs	MWH 25	MWH 35	MWH 45	MWH 55	MWH 65
Hydraulic cylinder for MWH	MZH	MZH	MZH	MZH	MZH
Installation tool for cover strip	MWC 25	MWC 35	MWC 45	MWC 55	MWC 65

AMS 3B Carriages accessories overview

Accessories	AMS 3B W 25	AMS 3B W 35	AMS 3B W 45	AMS 3B W 55	AMS 3B W 65
Additional wipers:					
Additional wipers NBR	ZCN 25	ZCN 35	ZCN 45	ZCN 55	ZCN 65
Additional wipers Viton	ZCV 25	ZCV 35	ZCV 45	ZCV 55	ZCV 65
Metal wiper	ASM 25-A	ASM 35-A	ASM 45-A	ASM 55-A	ASM 65-A
Bellows:					
Bellows	FBM 25	FBM 35	FBM 45	FBM 55	FBM 65
Adapter plate for bellows (spare part)	ZPL 25	ZPL 35	ZPL 45	ZPL 55	ZPL 65
End plate for bellows (spare part)	EPL 25	EPL 35	EPL 45	EPL 55	EPL 65
Assembly rails:					
Assembly rail	MRM 25	MRM 35	MRM 45	MRM 55	MRM 65
Lubrication plates:					
Lubrication plate	SPL 25-MR	SPL 35-MR	SPL 45-MR	SPL 55-MR	SPL 65-MR
Front plates:					
Front plate (spare part)	STP 25-EK	STP 35-EK	STP 45-EK	STP 55-EK	STP 65-EK
Lube nippels:					
Hydraulic-type grease nipple straight	SN 6	SN 6	SN 6	SN 6	SN 6
Hydraulic-type grease nipple 45°	SN 6-45	SN 6-45	SN 6-45	SN 6-45	SN 6-45
Hydraulic-type grease nipple 90°	SN 6-90	SN 6-90	SN 6-90	SN 6-90	SN 6-90
Flush type grease nipple M3	SN 3-T	-	-	-	-
Flush type grease nipple M6	SN 6-T	SN 6-T	SN 6-T	SN 6-T	SN 6-T
Grease gun for SN 3-T und SN 6-T	SFP-T3	SFP-T3	SFP-T3	SFP-T3	SFP-T3
Lube adapters:					
Straight screw-in connection M3	SA 3-D3	-	-	-	-
Lubrication adapter M8 round-head	SA 6-RD-M8	SA 6-RD-M8	SA 6-RD-M8	SA 6-RD-M8	SA 6-RD-M8
Lubrication adapter M8 hexagon head	-	SA 6-6KT-M8	SA 6-6KT-M8	SA 6-6KT-M8	SA 6-6KT-M8
Lubrication adapter G1/8 hexagon head	-	SA 6-6KT-G1/8	SA 6-6KT-G1/8	SA 6-6KT-G1/8	SA 6-6KT-G1/8
Swivel screw connection for pipe d=4 mm	SV 6-D4	SV 6-D4	SV 6-D4	SV 6-D4	SV 6-D4
Swivel screw connection M6	SV 6-M6	SV 6-M6	SV 6-M6	SV 6-M6	SV 6-M6
Swivel screw connection M6 long	SV 6-M6-L	SV 6-M6-L	SV 6-M6-L	SV 6-M6-L	SV 6-M6-L
Swivel screw connection M8	SV 6-M8	SV 6-M8	SV 6-M8	SV 6-M8	SV 6-M8
Swivel screw connection M8 long	SV 6-M8-L	SV 6-M8-L	SV 6-M8-L	SV 6-M8-L	SV 6-M8-L
Cables:					
Connecting cable, 12-pole	KAO 12-X	KAO 12-X	KAO 12-X	KAO 12-X	KAO 12-X
Connecting cable, 12-pole	KAO 13-X	KAO 13-X	KAO 13-X	KAO 13-X	KAO 13-X
Extension cable, 12-pole	KAO 14-X	KAO 14-X	KAO 14-X	KAO 14-X	KAO 14-X
Extension cable, 12-pole	KAO 15-X	KAO 15-X	KAO 15-X	KAO 15-X	KAO 15-X
Connecting cable, 12-pole	KAO 16-X	KAO 16-X	KAO 16-X	KAO 16-X	KAO 16-X

7.4 Order key Analog

Individual guide rails and carriages are ordered in accordance with the order codes described below.
AMS 3B carriages consist of guide carriage, casing and reading head.
All MONORAIL MR carriages can also be used with AMS 3B rails.
Q.v. chapter 2 and chapter 3.3 for the order key for accessories.
Separate order codes are used in each case for rails, carriages and accessories. This also applies to different versions of rails and carriages.
All guide components are supplied individually as standard, i.e. unassembled.
If required, SCHNEEBERGER can also supply rails and carriages assembled incl. accessories as complete systems. Please note the ordering instructions in chapter 2.4 if this applies.
The order code for the AMS 3B systems is made up of two groups. For the AMS system with an anolog interface, the code is AMSA. The AMS system with a digital interface is referred to as AMSD.

Order code for AMSA 3B Rails

	1x	AMSA 3B S	35	-N	-G1	-KC	-R12	-918	-19	-19	-CN	-TR50
Quantity												
Rail												
Size												
Type												
Accuracy												
Straightness												
Reference side												
Rail length L3												
Position of first fixing hole L5												
Position of last fixing hole L10												
Coating												
Magnetization												

NB

Q.v. chapter 7.1 to 7.3 for an overview of types, details of shapes, available options and accessories.
Q.v. chapter 2 for a description of the options.
If possible, standard lengths are preferred for L3 rail length.
These are calculated with the table values in chapter 7.2 using the following formula: $L3 = n \times L4 + L5 + L10 \leqslant L3max$.

Order code for AMSA 3B Carriages

	1x	AMSA 3B W	35	-A	-P1	-G1	-V3	-R1	-CN	-S10	-LN	-TSU
Quantity												
Carriage												
Size												
Type												
Reading head position												
Accuracy												
Preload												
Reference side												
Coating												
Lube connection												
Lubrication as delivered condition												
Interface												

Anmerkungen

Typenübersicht, Details zu den Bauformen, verfügbare Optionen und Zubehör siehe Kapitel 7.1 bis 7.3.
Beschreibung der Optionen siehe Kapitel 2.

Order code for AMSD 3B Rails

	1x	AMSD 3B S	-35	-N	-G1	-KC	-R12	-918	-19	-19	-CN	-TR50
Quantity												
Rail												
Size												
Type												
Accuracy												
Straightness												
Reference side												
Rail length L3												
Position of first fixing hole L5												
Position of last fixing hole L10												
Coating												
Magnetization												

NB

Q.v. chapter 7.1 to 7.3 for an overview of types, details of shapes, available options and accessories.
Q.v. chapter 2 for a description of the options.
If possible, standard lengths are preferred for L3 rail length.
These are calculated with the table values in chapter 7.2 using the following formula: $L3 = n \times L4 + L5 + L10 \leqslant L3max$.

Order code for AMSD 3B Carriages

	1x	AMSD 3B W	-35	-A	-P1	-G1	-V3	-R1	-CN	-S10	-LN	-TSD	-050	-80	ZN
Quantity															
Carriage															
Size															
Type															
Reading head position															
Accuracy															
Preload															
Reference side															
Coating															
Lube connection															
Lubrication as delivered condition															
Interface															
Interpolation															
Frequency															
Reference pulse															

NB

Q.v. chapter 7.1 to 7.3 for an overview of types, details of shapes, available options and accessories.
Q.v. chapter 2 for a description of the options.

8.0 MONORAIL AMS 4B

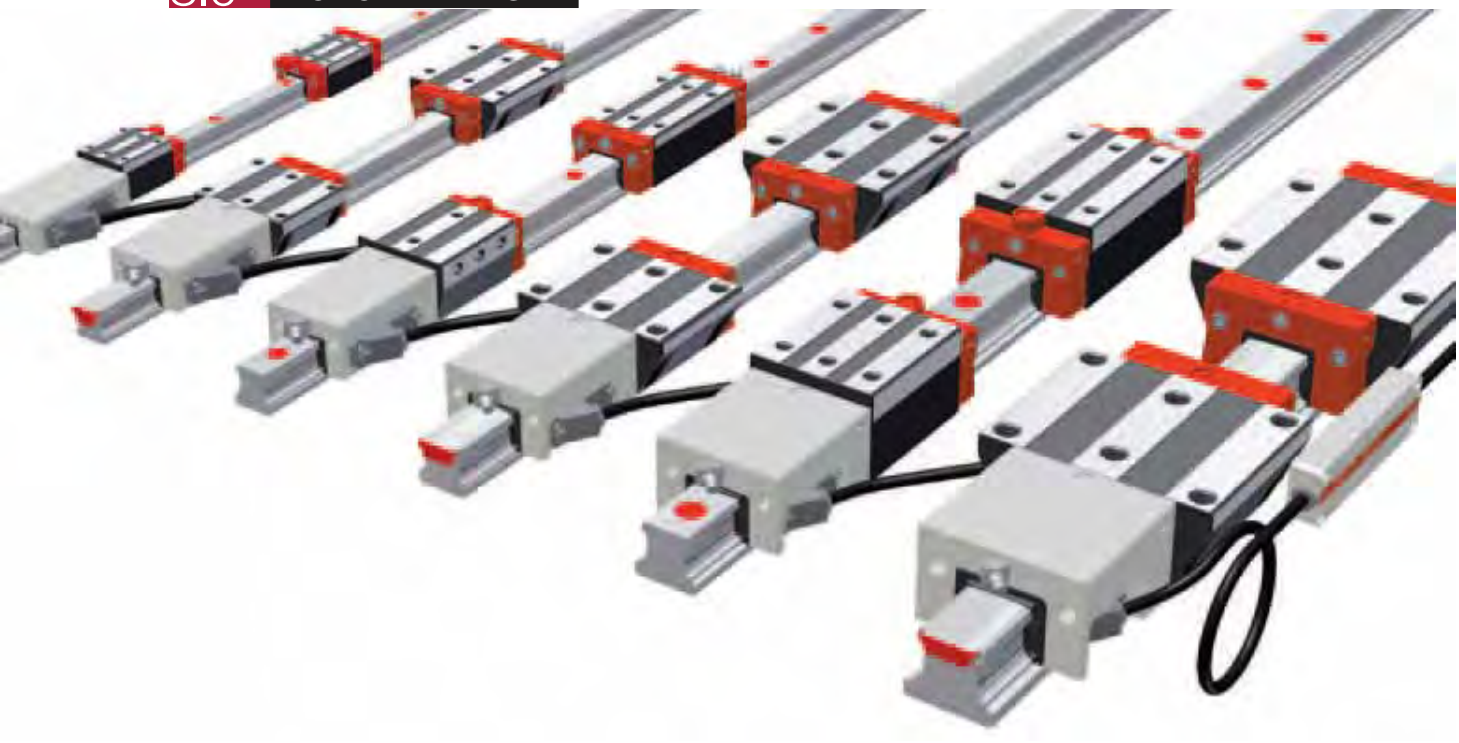

SCHNEEBERGER's MONORAIL AMS 4B is an integrated linear encoder system for use on all protected machine tool axes with lower machining forces and high demands on system precision. Mechanically the AMS 4B is based on SCHNEEBERGER's MONORAIL BM ball guide with lengths up to 6 metres. The integration of the measurement system allows very compact axes to be put together.
A digital interface with a range of different resolutions for different maximum speeds, and an analog 1Vss (200 µm signal period) interface are available as interfaces with the control system. Reference marks can be set at 50mm intervals or distance coded. Different options for carriage lubrication and sealing permit the best possible degree of adaptation to application requirements. The easily interchangeable reading head is identical for all sizes.

Features of System MONORAIL AMS 4B

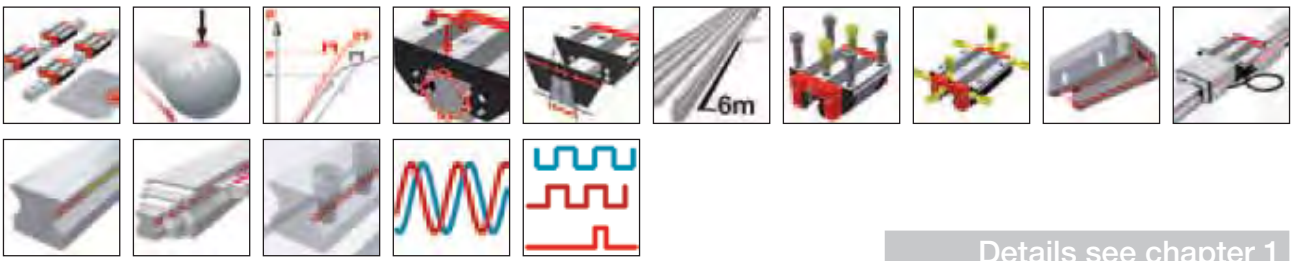

Details see chapter 1

8.1 Overview of types, sizes and available options

8.2 Technical data and options

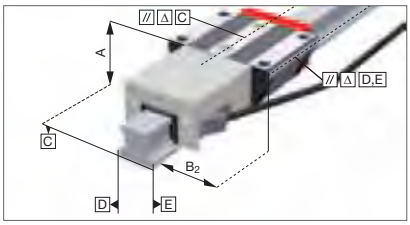

8.3 Accessories MONORAIL AMS 4B

8.4 Order key

Product overview AMS 4B Rails

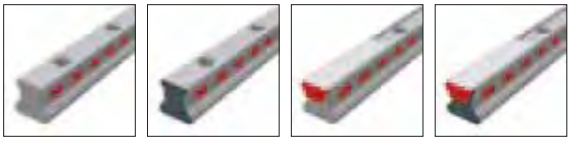

Buildsizes / Rail build forms	N standard	ND with tapped holes at the bottom	C for cover strip	CD for cover strip, through hardened			
Size 15		AMS 4B S 15-ND		AMS 4B S 15-CD			
Size 20	AMS 4B S 20-N		AMS 4B S 20-C				
Size 25	AMS 4B S 25-N		AMS 4B S 25-C				
Size 30	AMS 4B S 30-N		AMS 4B S 30-C				
Size 35	AMS 4B S 35-N		AMS 4B S 35-C				
Size 45	AMS 4B S 45-N		AMS 4B S 45-C				
Features							
Screwable from above	●	●	●	●			
Small assembly effort			●	●			
Great single-part system length	●		●				
For the support of metal covers		●					

Available options for AMS 4B Rails

Details see chapter 2

Accuracy

- G0 Highly accurate
- G1 Very accurate
- G2 Accurate
- G3 Standard

Straightness

- KC Standard

Coating

- CN None
- CH Hard chromium

Locating sides

- R11 Ref.bottom, scale bottom
- R12 Ref.bottom, scale top
- R21 Ref.top, scale bottom
- R22 Ref.top, scale top

Magnetisierung

- TR50 50 mm Raster
- TD20 20 mm Code
- TD50 50 mm Code

Available accessories for AMS 4B Rails

Details see chapter 4.3

Plugs

Cover strips

Assembly tools

Product overview AMS 4B Carriages

Buildsizes / Carriage build forms	A standard	B standard, long	C compact, high	D compact, high, long	E compact, high, for lateral fixing	F compact	G compact, long
Size 15	AMS 4B W 15-A		AMS 4B W 15-C			AMS 4B W 15-F	
Size 20	AMS 4B W 20-A	AMS 4B W 20-B	AMS 4B W 20-C	AMS 4B W 20-D			
Size 25	AMS 4B W 25-A	AMS 4B W 25-B	AMS 4B W 25-C	AMS 4B W 25-D	AMS 4B W 25-E	AMS 4B W 25-F	AMS 4B W 25-G
Size 30	AMS 4B W 30-A	AMS 4B W 30-B	AMS 4B W 30-C	AMS 4B W 30-D	AMS 4B W 30-E	AMS 4B W 30-F	AMS 4B W 30-G
Size 35	AMS 4B W 35-A	AMS 4B W 35-B	AMS 4B W 35-C	AMS 4B W 35-D	AMS 4B W 35-E	AMS 4B W 35-F	AMS 4B W 35-G
Size 45	AMS 4B W 45-A	AMS 4B W 45-B	AMS 4B W 45-C	AMS 4B W 45-D		AMS 4B W 45-F	AMS 4B W 45-G
Features							
Screwable from above	●	●	●	●		●	●
Screwable from below	●	●					
Screwable from the side					●		
For high loads and moments		●		●			●
For medium loads and moments	●		●		●	●	
For limited installation space						●	●

Available options for AMS 4B Carriages

Details see chapter 2

Accuracy

- G0 Highly accurate
- G1 Very accurate
- G2 Accurate
- G3 Standard

Preload

- V0 Very Low
- V1 Low
- V2 Medium
- V3 High

Reference side

- R1 Ref. at bottom
- R2 Ref. on top

Coating

- CN None
- CH Hard chromium

Lube connections

- S10 Left center
- S20 Right center
- S11 Top left
- S21 Top right
- S12 Lower left side
- S22 Lower right side
- S13 Upper left side
- S23 Upper right side
- S32 Left side
- S42 Right side

Lubrication

- LN Oil protect
- LG Grease protect
- LV Full greasing

Interface

- TMU TMU, analog, 0.3m
- TRU TRU, analog, 3m
- TSU TSU, analog, 3m
- TMD TMD, digital, 0.3m
- TRD TRD, digital, 3m
- TSD TSD, digital, 3m

Reading head position

- P1 Right top
- P3 Left bottom

Available accessories for AMS 4B Carriages

Details see chapter 2.1 and 4.3

Additional wipers
Front plates
Bellows
Lube nippels
Assembly rails
Lube adapters
Lubrication plates
Cables

AMS 4B S 15 Drawings

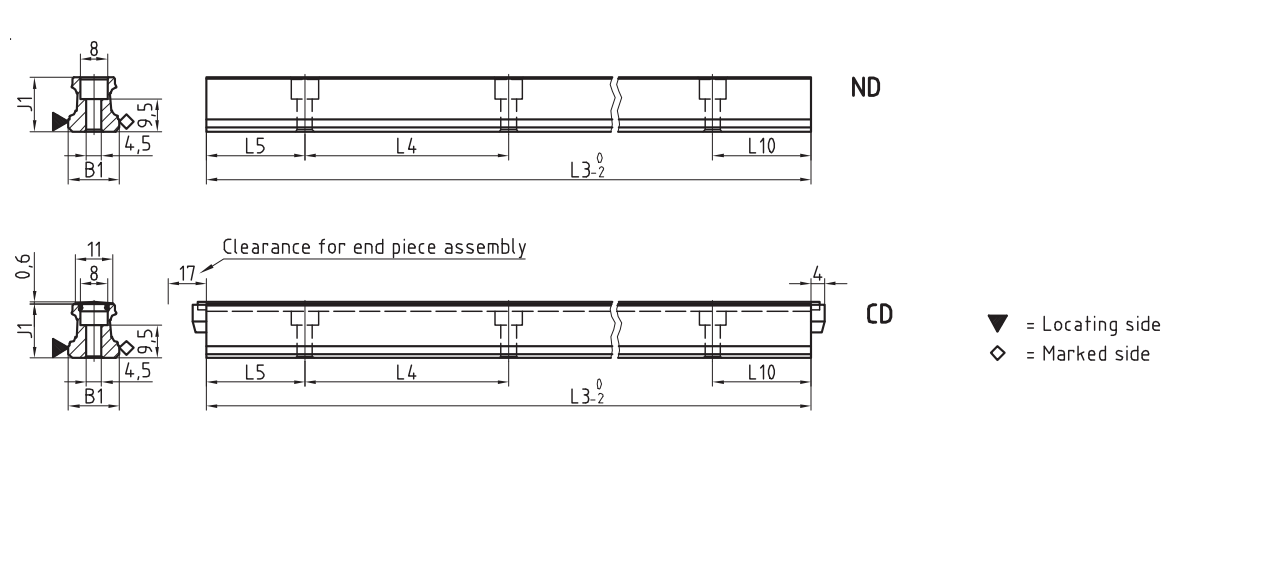

AMS 4B W 15 Drawings

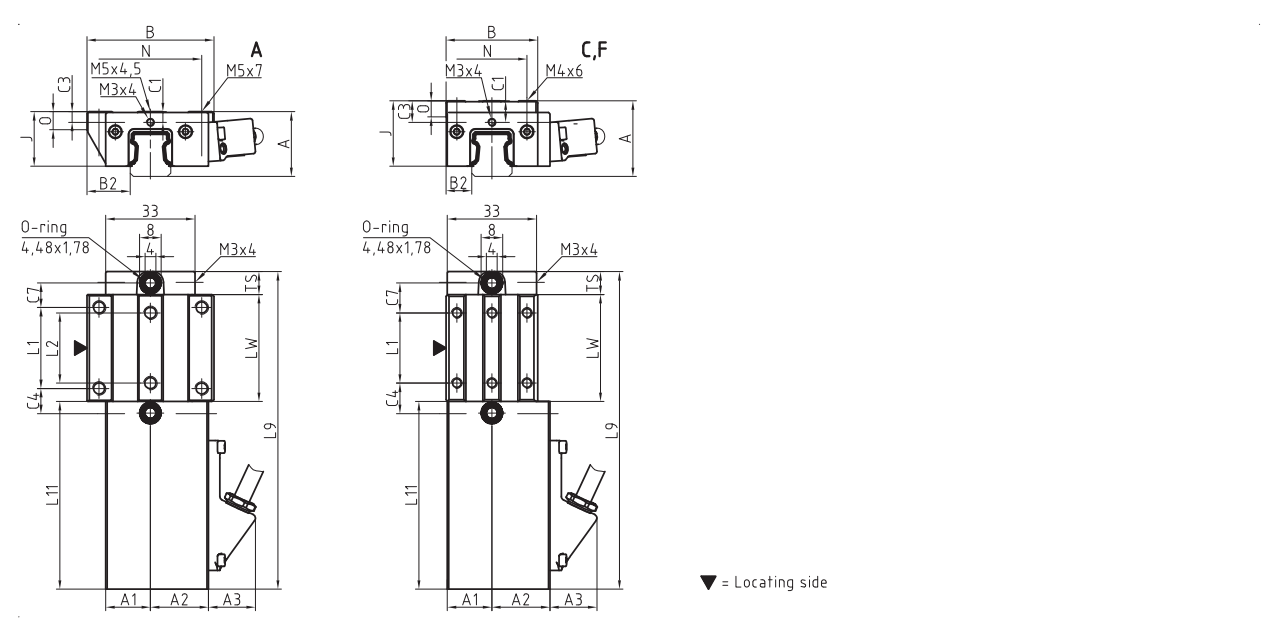

AMS 4B W 15 Rigidity diagram

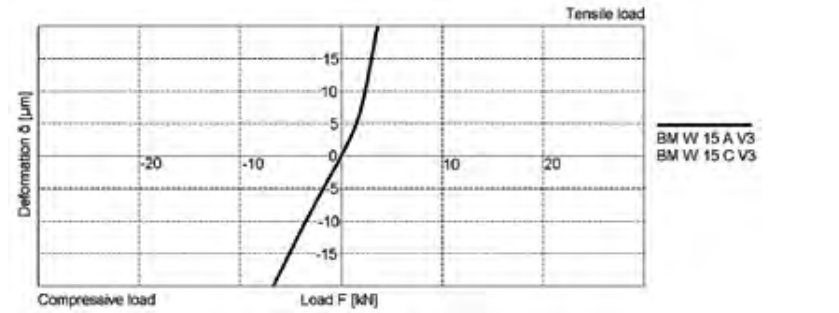

AMS 4B W 15 Load rating

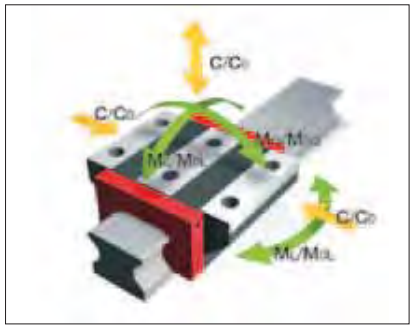

AMS 4B S 15 Dimensions


	AMS 4B S 15-N	AMS 4B S 15-C					
B1: Rail width	15	15					
J1: Rail height	15.7	15.7					
L3: Rail length max.	1500	1500					
L4: Spacing of fixing holes	60	60					
L5/L10: Position of first/last fixing hole	28.5	28.5					
Gew.: Rail weight, specific (kg/m)	1.4	1.3					

Available options for AMS 4B S 15

AMS 4B W 15 Dimensions and capacities



	AMS 4B W 15-A	AMS 4B W 15-C	AMS 4B W 15-F				
A: System height	24	28	24				
A1: Half width of housing on opposite side	16.5	16.5	16.5				
A2: Half width of housing on reading head side	21.5	21.5	21.5				
A3: Projection of reading head	17.4	17.4	17.4				
B: Carriage width	47	34	34				
B2: Distance between locating faces	16	9.5	9.5				
C1: Position of center front lube hole	4	8	4				
C3: Position of lateral lube hole	4	8	4				
C4: Position of lateral lube hole	9.3	11.3	11.3				
C7: Position of top lube hole	9.05	11.05	11.05				
J: Carriage height	20.2	24.2	20.2				
L1: Exterior fixing hole spacing	30	26	26				
L2: Interior fixing hole spacing	26	-	-				
L9: Carriage length with housing	117.6	117.6	117.6				
L11: Housing length	69.5	69.5	69.5				
Lw: Inner carriage body length	39.6	39.6	39.6				
N: Lateral fixing hole spacing	38	26	26				
O: Reference face height	7	6	5.5				
Ts: Front plate thickness	8.5	8.5	8.5				
Capacities and weights							
C0: Static load capacitiy (N)	19600	19600	19600				
C100: Dynamic load capacity (N)	9000	9000	9000				
MOQ: Static cross moment capacity (Nm)	181	181	181				
MOL: Static longitud. moment capacity (Nm)	146	146	146				
MQ: Dyn. cross moment capacity (Nm)	83	83	83				
ML: Dyn. longitud. moment capacity (Nm)	67	67	67				
Gew: Carriage weight (kg)	0.8	0.8	0.7				

Available options for AMS 4B W 15

AMS 4B S 20 Drawings

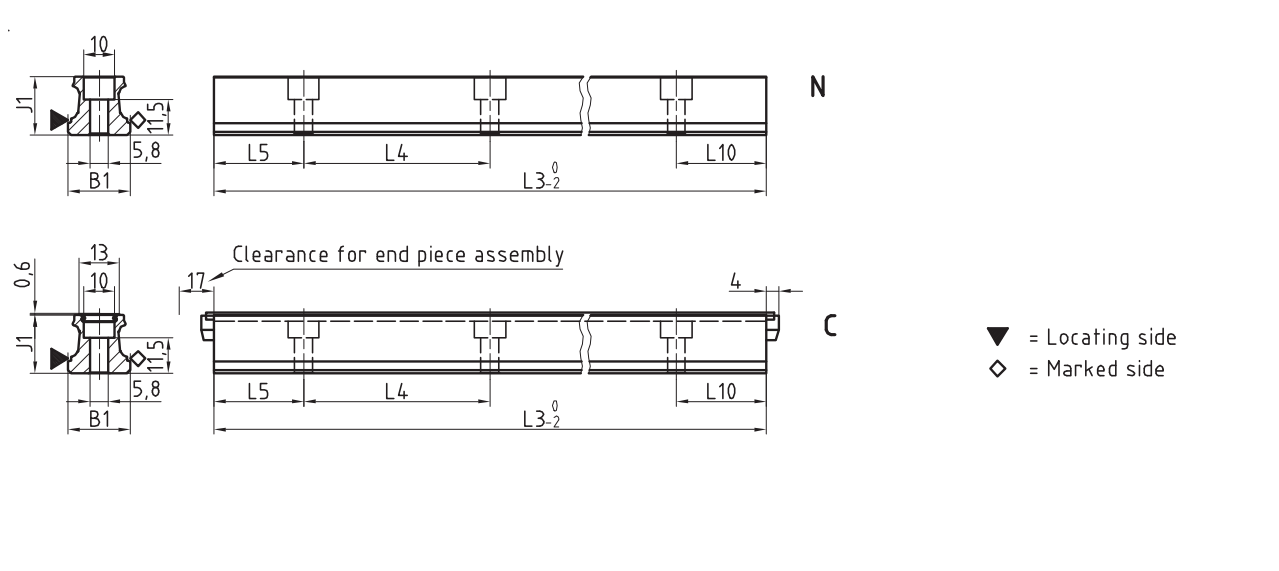

AMS 4B W 20 Drawings

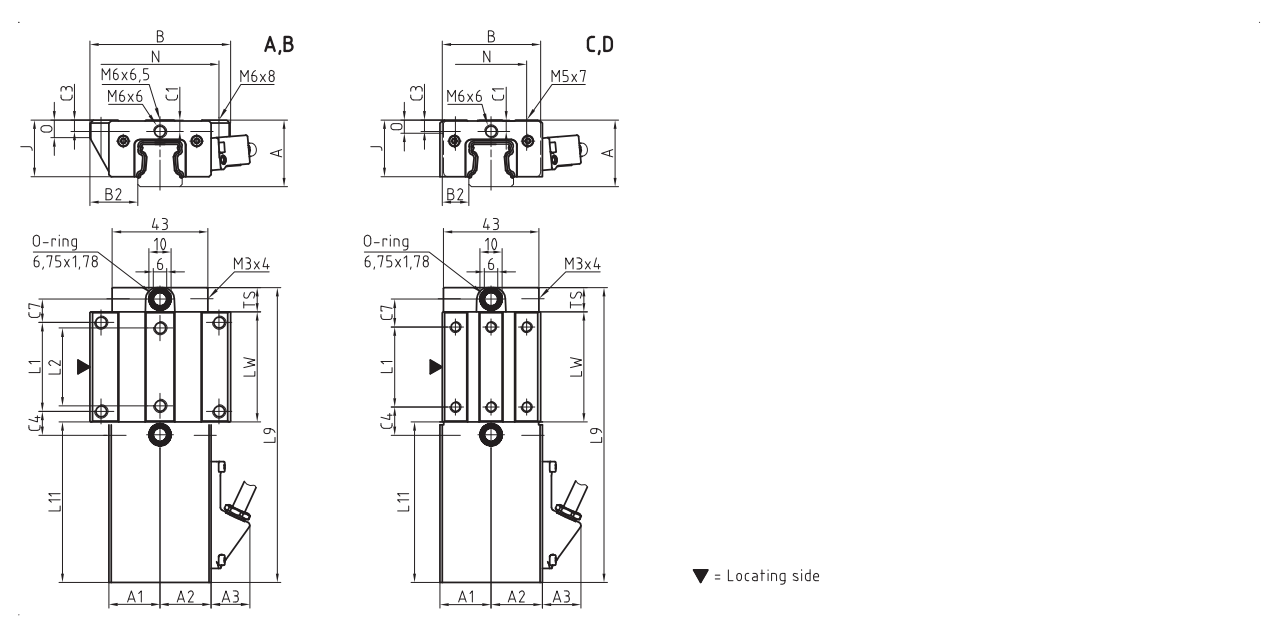

AMS 4B W 20 Rigidity diagram

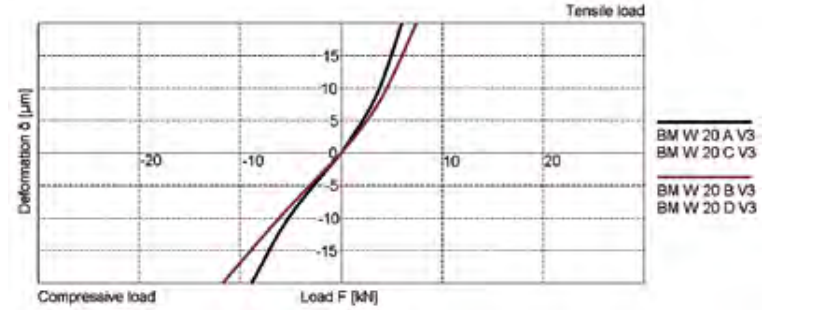

AMS 4B W 20 Load rating

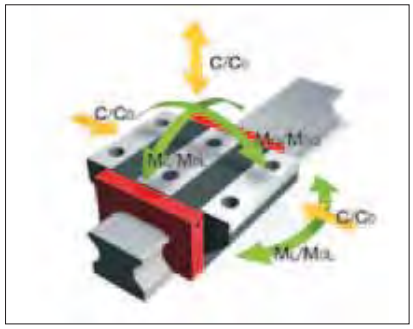

AMS 4B S 20 Dimensions


	AMS 4B S 20-N	AMS 4B S 20-C					
B1: Rail width	20	20					
J1: Rail height	19	19					
L3: Rail length max.	3000	3000					
L4: Spacing of fixing holes	60	60					
L5/L10: Position of first/last fixing hole	28.5	28.5					
Gew.: Rail weight, specific (kg/m)	2.2	2.1					

Available options for AMS 4B S 20

AMS 4B W 20 Dimensions and capacities




	AMS 4B W 20-A	AMS 4B W 20-B	AMS 4B W 20-C	AMS 4B W 20-D			
A: System height	30	30	30	30			
A1: Half width of housing on opposite side	23	23	23	23			
A2: Half width of housing on reading head side	23	23	23	23			
A3: Projection of reading head	17.4	17.4	17.4	17.4			
B: Carriage width	63	63	44	44			
B2: Distance between locating faces	21.5	21.5	12	12			
C1: Position of center front lube hole	5.2	5.2	5.2	5.2			
C3: Position of lateral lube hole	5.2	5.2	5.2	5.2			
C4: Position of lateral lube hole	10.75	18.75	12.75	13.75			
C7: Position of top lube hole	10.25	18.25	12.25	13.25			
J: Carriage height	25.5	25.5	25.5	25.5			
L1: Exterior fixing hole spacing	40	40	36	50			
L2: Interior fixing hole spacing	35	35	-	-			
L9: Carriage length with housing	132.5	148.5	132.5	148.5			
L11: Housing length	72	72	72	72			
Lw: Inner carriage body length	49.5	65.5	49.5	65.5			
N: Lateral fixing hole spacing	53	53	32	32			
O: Reference face height	8	8	6	6			
Ts: Front plate thickness	11	11	11	11			
Capacities and weights							
C0: Static load capacitiy (N)	31400	41100	31400	41100			
C100: Dynamic load capacity (N)	14400	17400	14400	17400			
MOQ: Static cross moment capacity (Nm)	373	490	373	490			
MOL: Static longitud. moment capacity (Nm)	292	495	292	495			
MQ: Dyn. cross moment capacity (Nm)	171	206	171	206			
ML: Dyn. longitud. moment capacity (Nm)	134	208	134	208			
Gew: Carriage weight (kg)	1.0	1.2	0.9	1.0			

Available options for AMS 4B W 20

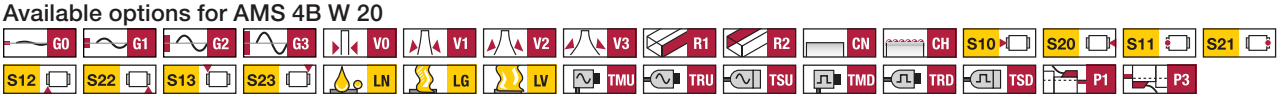

AMS 4B S 25 Drawings

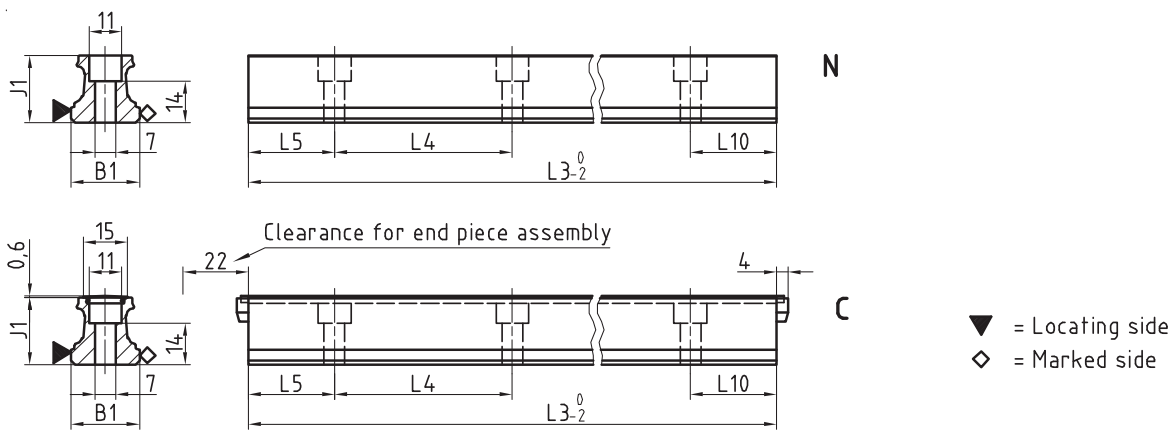

AMS 4B W 25 Drawings

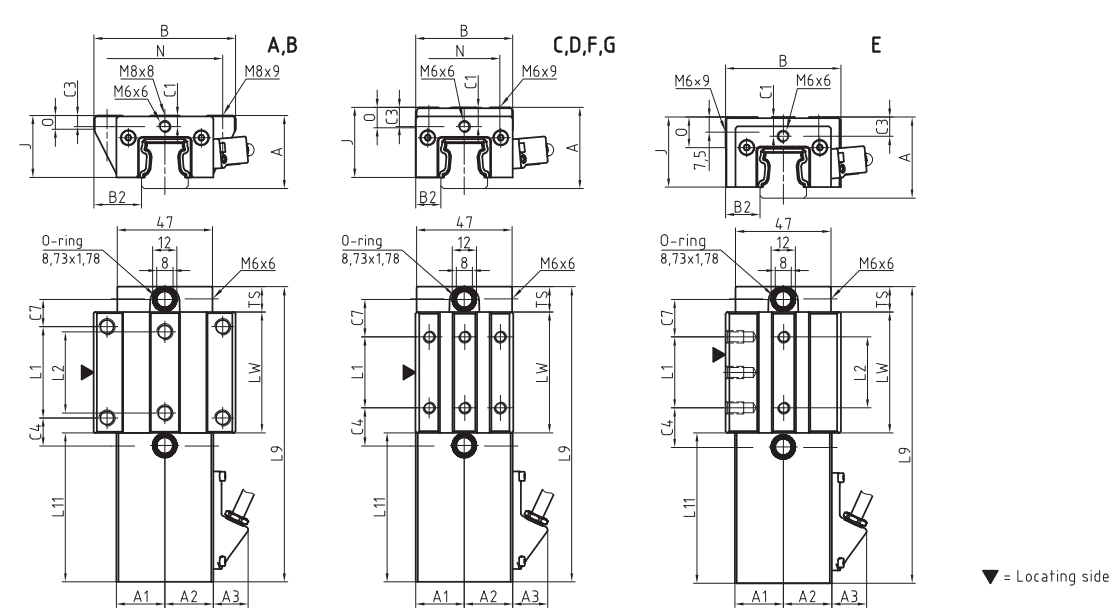

AMS 4B W 25 Rigidity diagram

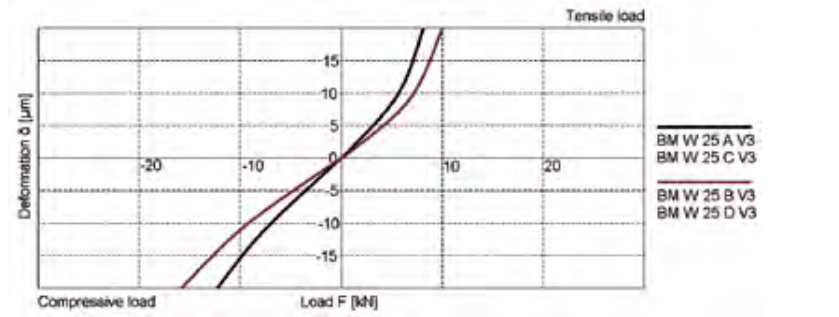

AMS 4B W 25 Load rating

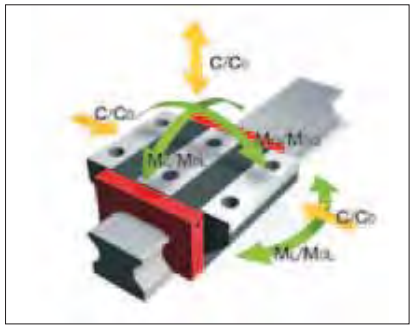

AMS 4B S 25 Dimensions


	AMS 4B S 25-N	AMS 4B S 25-C					
B1: Rail width	23	23					
J1: Rail height	22.7	22.7					
L3: Rail length max.	6000	3000					
L4: Spacing of fixing holes	60	60					
L5/L10: Position of first/last fixing hole	28.5	28.5					
Gew.: Rail weight, specific (kg/m)	3.0	2.8					

Available options for AMS 4B S 25

AMS 4B W 25 Dimensions and capacities

	AMS 4B W 25-A	AMS 4B W 25-B	AMS 4B W 25-C	AMS 4B W 25-D	AMS 4B W 25-E	AMS 4B W 25-F	AMS 4B W 25-G
A: System height	36	36	40	40	40	36	36
A1: Half width of housing on opposite side	23.5	23.5	23.5	23.5	23.5	23.5	23.5
A2: Half width of housing on reading head side	23.5	23.5	23.5	23.5	23.5	23.5	23.5
A3: Projection of reading head	17.2	17.2	17.2	17.2	17.2	17.2	17.2
B: Carriage width	70	70	48	48	57	48	48
B2: Distance between locating faces	23.5	23.5	12.5	12.5	17	12.5	12.5
C1: Position of center front lube hole	5.5	5.5	9.5	9.5	9.5	5.5	5.5
C3: Position of lateral lube hole	5.5	5.5	9.5	9.5	9.5	5.5	5.5
C4: Position of lateral lube hole	13.75	23.25	18.75	20.75	18.75	18.75	20.75
C7: Position of top lube hole	13.5	23	18.5	20.5	18.5	18.5	20.5
J: Carriage height	30.5	30.5	34.5	34.5	34.5	30.5	30.5
L1: Exterior fixing hole spacing	45	45	35	50	35	35	50
L2: Interior fixing hole spacing	40	40	-	-	-	-	-
L9: Carriage length with housing	145.5	164.5	145.5	164.5	145.5	145.5	164.5
L11: Housing length	73.5	73.5	73.5	73.5	73.5	73.5	73.5
Lw: Inner carriage body length	59.5	78.5	59.5	78.5	59.5	59.5	78.5
N: Lateral fixing hole spacing	57	57	35	35	-	35	35
O: Reference face height	7	7	11	11	15	7.1	7.1
Ts: Front plate thickness	12.5	12.5	12.5	12.5	12.5	12.5	12.5
Capacities and weights							
C0: Static load capacitiy (N)	46100	60300	46100	60300	46100	46100	60300
C100: Dynamic load capacity (N)	21100	25500	21100	25500	21100	21100	25500
M0Q: Static cross moment capacity (Nm)	631	825	631	825	631	631	825
M0L: Static longitud. moment capacity (Nm)	513	863	513	863	513	513	863
MQ: Dyn. cross moment capacity (Nm)	289	349	289	349	289	289	349
ML: Dyn. longitud. moment capacity (Nm)	235	365	235	365	235	235	365
Gew: Carriage weight (kg)	1.3	1.5	1.2	1.4	1.3	1.1	1.3

Available options for AMS 4B W 25

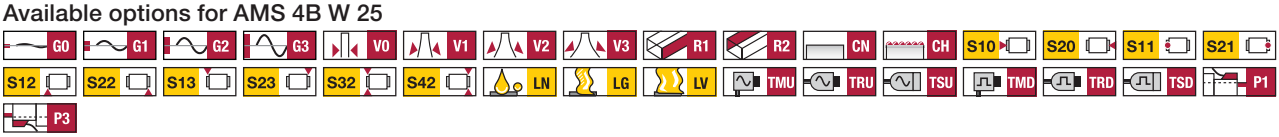

AMS 4B S 30 Drawings

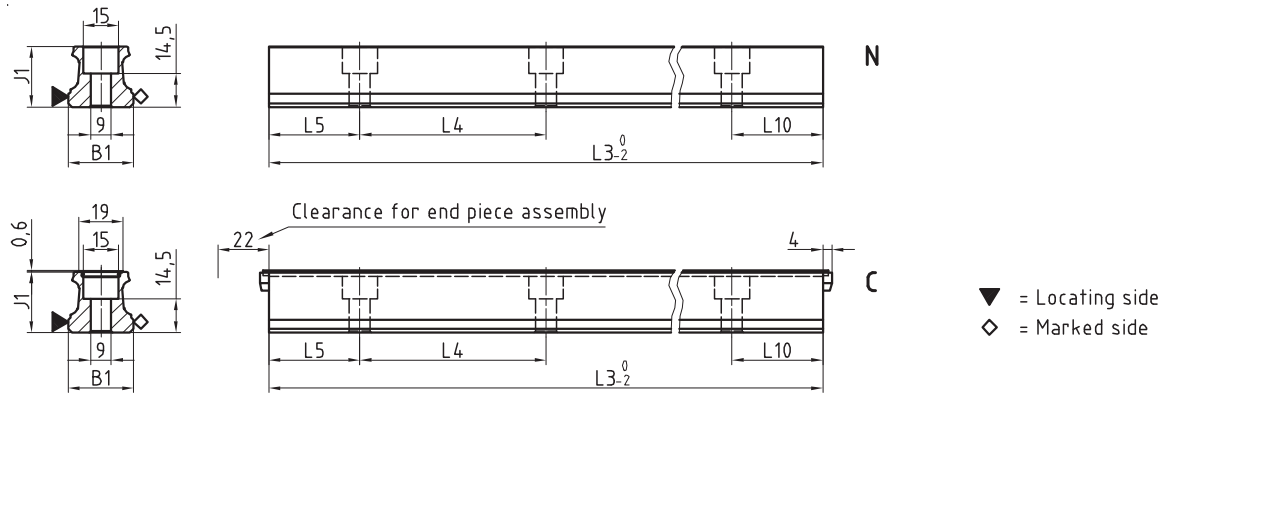

AMS 4B W 30 Drawings

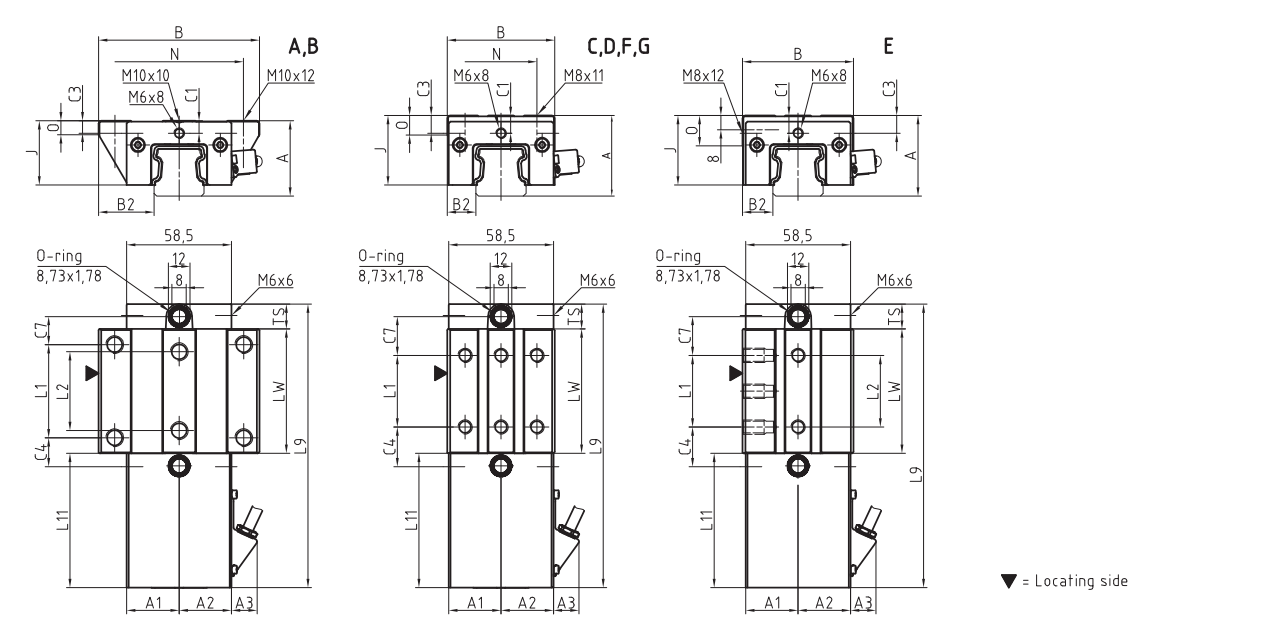

AMS 4B W 30 Rigidity diagram

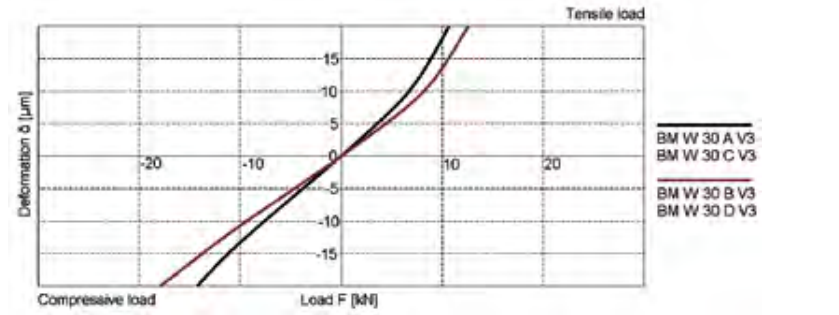

AMS 4B W 30 Load rating

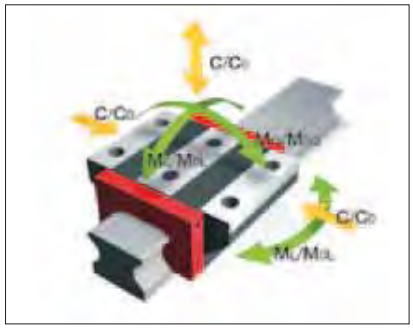

AMS 4B S 30 Dimensions


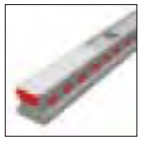

	AMS 4B S 30-N	AMS 4B S 30-C					
B1: Rail width	28	28					
J1: Rail height	26	26					
L3: Rail length max.	6000	6000					
L4: Spacing of fixing holes	80	80					
L5/L10: Position of first/last fixing hole	38.5	38.5					
Gew.: Rail weight, specific (kg/m)	4.3	4.1					

Available options for AMS 4B S 30

AMS 4B W 30 Dimensions and capacities

	AMS 4B W 30-A	AMS 4B W 30-B	AMS 4B W 30-C	AMS 4B W 30-D	AMS 4B W 30-E	AMS 4B W 30-F	AMS 4B W 30-G
A: System height	42	42	45	45	45	42	42
A1: Half width of housing on opposite side	29.3	29.3	29.3	29.3	29.3	29.3	29.3
A2: Half width of housing on reading head side	29.3	29.3	29.3	29.3	29.3	29.3	29.3
A3: Projection of reading head	14.2	14.2	14.2	14.2	14.2	14.2	14.2
B: Carriage width	90	90	60	60	62	60	60
B2: Distance between locating faces	31	31	16	16	17	16	16
C1: Position of center front lube hole	7	7	10	10	10	7	7
C3: Position of lateral lube hole	7	7	10	10	10	7	7
C4: Position of lateral lube hole	16.2	27.2	22.2	23.2	22.2	22.2	23.2
C7: Position of top lube hole	15.7	26.7	21.7	22.7	21.7	21.7	22.7
J: Carriage height	35.9	35.9	38.9	38.9	38.9	35.9	35.9
L1: Exterior fixing hole spacing	52	52	40	60	40	40	60
L2: Interior fixing hole spacing	44	44	-	-	40	-	-
L9: Carriage length with housing	158.4	180.4	158.4	180.4	158.4	158.4	180.4
L11: Housing length	75	75	75	75	75	75	75
Lw: Inner carriage body length	69.4	91.4	69.4	91.4	69.4	69.4	91.4
N: Lateral fixing hole spacing	72	72	40	40	-	40	40
O: Reference face height	7.8	7.8	11	11	17	8	8
Ts: Front plate thickness	14	14	14	14	14	14	14
Capacities and weights							
C0: Static load capacitiy (N)	63700	83300	63700	83300	63700	63700	83300
C100: Dynamic load capacity (N)	29200	35300	29200	35300	29200	29200	35300
M0Q: Static cross moment capacity (Nm)	1084	1414	1084	1414	1084	1084	1414
M0L: Static longitud. moment capacity (Nm)	829	1390	829	1390	829	829	1390
MQ: Dyn. cross moment capacity (Nm)	497	599	497	599	497	497	599
ML: Dyn. longitud. moment capacity (Nm)	380	589	380	589	380	380	589
Gew: Carriage weight (kg)	1.8	2.2	1.7	1.9	1.7	1.6	1.8

Available options for AMS 4B W 30

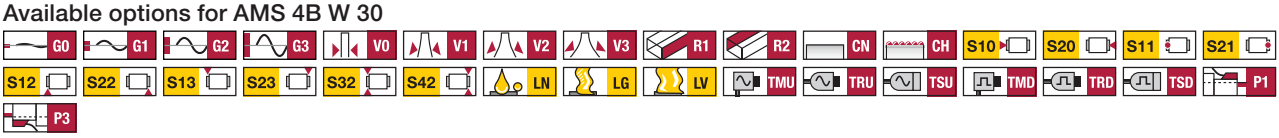

AMS 4B S 35 Drawings

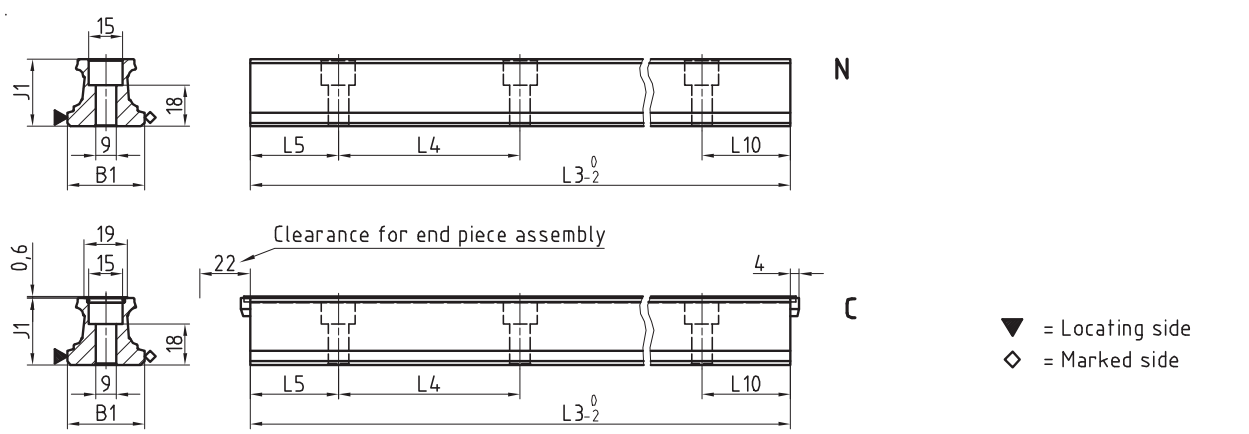

AMS 4B W 35 Drawings

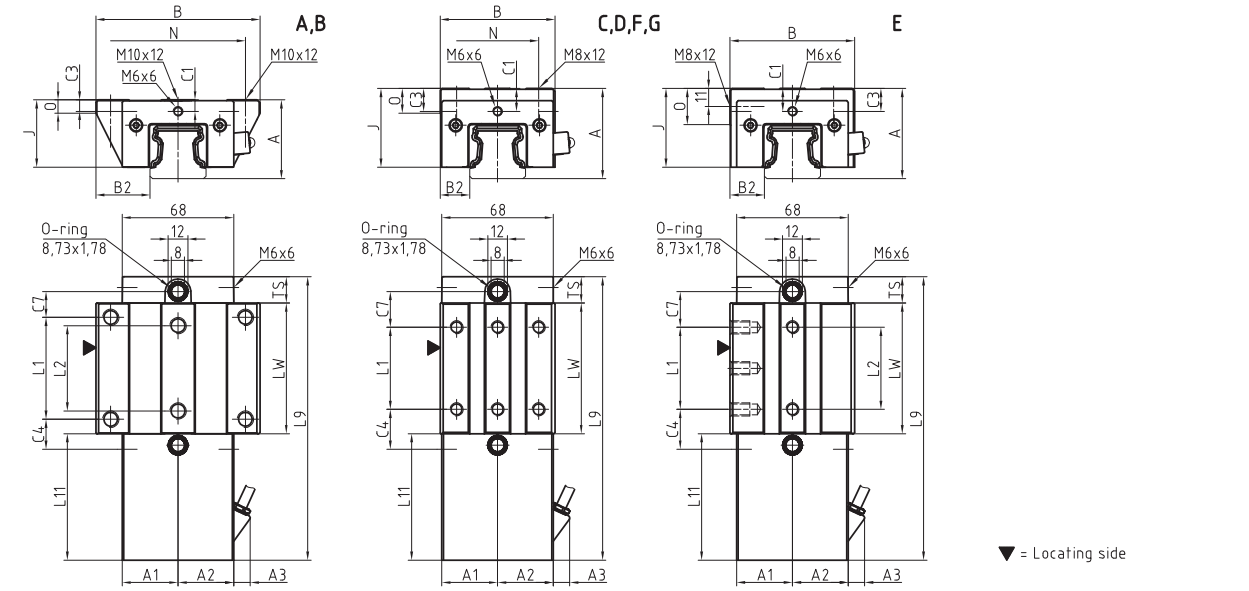

AMS 4B W 35 Rigidity diagram

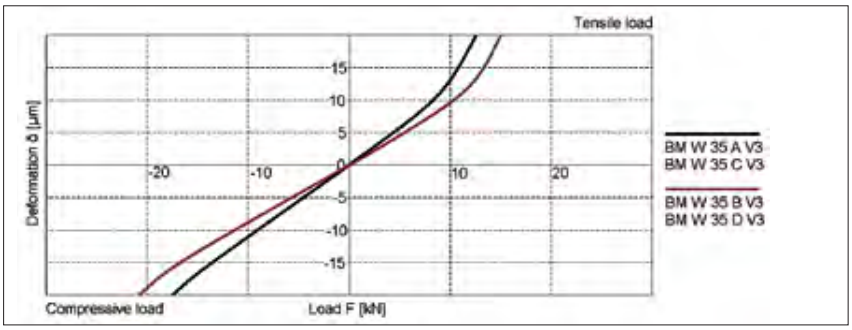

AMS 4B W 35 Load rating

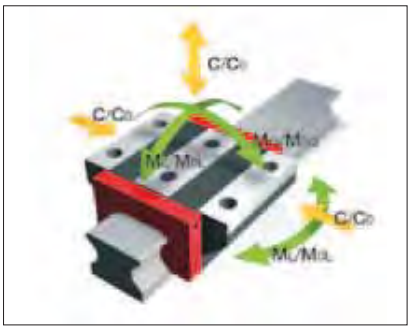

AMS 4B S 35 Dimensions


	AMS 4B S 35-N	AMS 4B S 35-C					
B1: Rail width	34	34					
J1: Rail height	29.5	29.5					
L3: Rail length max.	6000	6000					
L4: Spacing of fixing holes	80	80					
L5/L10: Position of first/last fixing hole	38.5	38.5					
Gew.: Rail weight, specific (kg/m)	5.4	5.2					

Available options for AMS 4B S 35

AMS 4B W 35 Dimensions and capacities

	AMS 4B W 35-A	AMS 4B W 35-B	AMS 4B W 35-C	AMS 4B W 35-D	AMS 4B W 35-E	AMS 4B W 35-F	AMS 4B W 35-G
A: System height	48	48	55	55	55	48	48
A1: Half width of housing on opposite side	34	34	34	34	34	34	34
A2: Half width of housing on reading head side	34	34	34	34	34	34	34
A3: Projection of reading head	9.9	9.9	9.9	9.9	9.9	9.9	9.9
B: Carriage width	100	100	70	70	76	70	70
B2: Distance between locating faces	33	33	18	18	21	18	18
C1: Position of center front lube hole	7	7	14	14	14	7	7
C3: Position of lateral lube hole	7	7	14	14	14	7	7
C4: Position of lateral lube hole	18.3	31.05	24.3	26.05	24.3	24.3	26.05
C7: Position of top lube hole	15.8	28.55	21.8	23.55	21.8	21.8	23.55
J: Carriage height	41	41	48	48	48	41	41
L1: Exterior fixing hole spacing	62	62	50	72	50	50	72
L2: Interior fixing hole spacing	52	52	-	-	50	-	-
L9: Carriage length with housing	172.6	198.1	172.6	198.1	172.6	172.6	198.1
L11: Housing length	77	77	77	77	77	77	77
Lw: Inner carriage body length	79.6	105.1	79.6	105.1	79.6	79.6	105.1
N: Lateral fixing hole spacing	82	82	50	50	-	50	50
O: Reference face height	8	8	15	15	22	8	8
Ts: Front plate thickness	16	16	16	16	16	16	16
Capacities and weights							
C0: Static load capacitiy (N)	84400	110300	84400	110300	84400	84400	110300
C100: Dynamic load capacity (N)	38700	46700	38700	46700	38700	38700	46700
M0Q: Static cross moment capacity (Nm)	1566	2048	1566	2048	1566	1566	2048
M0L: Static longitud. moment capacity (Nm)	1252	2104	1252	2104	1252	1252	2104
MQ: Dyn. cross moment capacity (Nm)	718	867	718	867	718	718	867
ML: Dyn. longitud. moment capacity (Nm)	574	891	574	891	574	574	891
Gew: Carriage weight (kg)	2.5	3.0	2.5	3.0	2.5	2.2	2.5

Available options for AMS 4B W 35

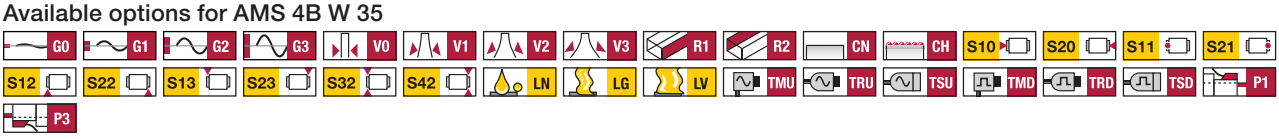

AMS 4B S 45 Drawings

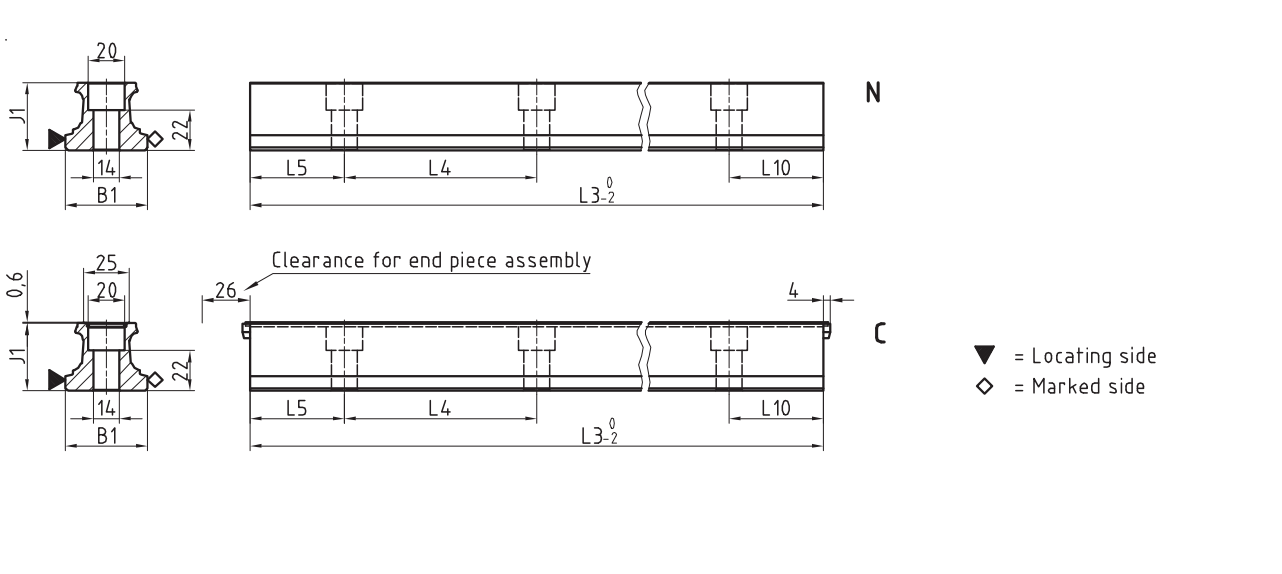

AMS 4B W 45 Drawings

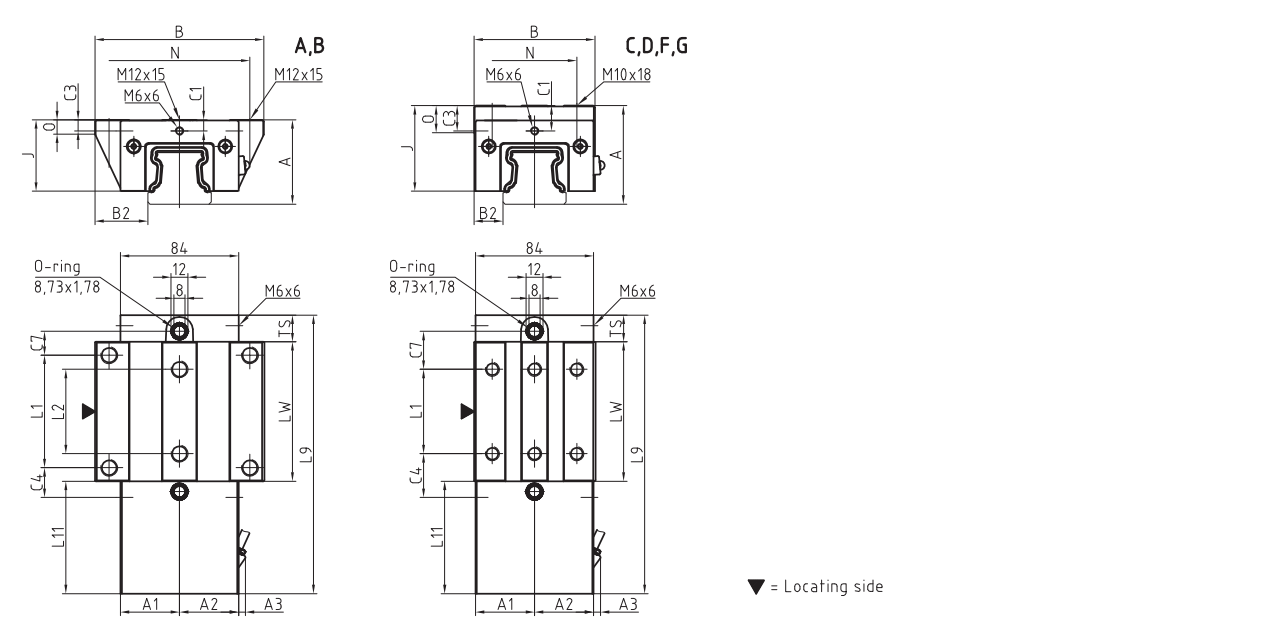

AMS 4B W 45 Rigidity diagram

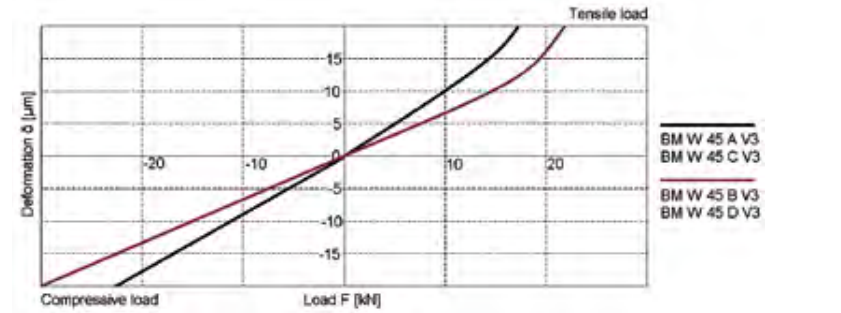

AMS 4B W 45 Load rating

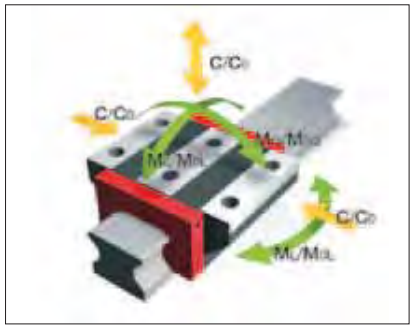

AMS 4B S 45 Dimensions


	AMS 4B S 45-N	AMS 4B S 45-C					
B1: Rail width	45	45					
J1: Rail height	37	37					
L3: Rail length max.	6000	6000					
L4: Spacing of fixing holes	105	105					
L5/L10: Position of first/last fixing hole	51	51					
Gew.: Rail weight, specific (kg/m)	8.8	8.6					

Available options for AMS 4B S 45

AMS 4B W 45 Dimensions and capacities






	AMS 4B W 45-A	AMS 4B W 45-B	AMS 4B W 45-C	AMS 4B W 45-D	AMS 4B W 45-F	AMS 4B W 45-G	
A: System height	60	60	70	70	60	60	
A1: Half width of housing on opposite side	42	42	42	42	42	42	
A2: Half width of housing on reading head side	42	42	42	42	42	42	
A3: Projection of reading head	4.8	4.8	4.8	4.8	4.8	4.8	
B: Carriage width	120	120	86	86	86	86	
B2: Distance between locating faces	37.5	37.5	20.5	20.5	20.5	20.5	
C1: Position of center front lube hole	8	8	18	18	8	8	
C3: Position of lateral lube hole	8	8	18	18	8	8	
C4: Position of lateral lube hole	21.05	36.8	31.05	36.8	31.05	36.8	
C7: Position of top lube hole	17.05	32.8	27.05	32.8	27.05	32.8	
J: Carriage height	50.8	50.8	60.8	60.8	50.8	50.8	
L1: Exterior fixing hole spacing	80	80	60	80	60	80	
L2: Interior fixing hole spacing	60	60	-	-	-	-	
L9: Carriage length with housing	198.1	229.6	198.1	229.6	198.1	229.6	
L11: Housing length	80	80	80	80	80	80	
Lw: Inner carriage body length	99.1	130.6	99.1	130.6	99.1	130.6	
N: Lateral fixing hole spacing	100	100	60	60	60	60	
O: Reference face height	10	10	19	19	10	10	
Ts: Front plate thickness	19	19	19	19	19	19	
Capacities and weights							
C0: Static load capacitiy (N)	134800	176300	134800	176300	134800	176300	
C100: Dynamic load capacity (N)	61900	74700	61900	74700	61900	74700	
M0Q: Static cross moment capacity (Nm)	3193	4175	3193	4175	3193	4175	
M0L: Static longitud. moment capacity (Nm)	2498	4199	2498	4199	2498	4199	
MQ: Dyn. cross moment capacity (Nm)	1466	1769	1466	1769	1466	1769	
ML: Dyn. longitud. moment capacity (Nm)	1147	1779	1147	1779	1147	1779	
Gew: Carriage weight (kg)	4.1	5.1	4.2	5.2	3.6	4.4	

Available options for AMS 4B W 45

AMS 4B Rails accessories overview

Accessories	AMS 4B S 15	AMS 4B S 20	AMS 4B S 25	AMS 4B S 30	AMS 4B S 35	AMS 4B S 45
Plugs:						
Plastic plugs	BRK 15	BRK 20	BRK 25	BRK 30	BRK 35	BRK 45
Cover strips:						
Cover strip (spare part)	BAC 15	BAC 20	BAC 25	BAC 30	BAC 35	BAC 45
End piece for cover strip (spare part)	EST 15-BAC	EST 20-BAC	EST 25-BAC	EST 30-BAC	EST 35-BAC	EST 45-BAC
Assembly tools:						
Installation tool for cover strip	BWC 15	BWC 20	BWC 25	BWC 30	BWC 35	BWC 45

AMS 4B Carriages accessories overview

Accessories	AMS 4B W 15	AMS 4B W 20	AMS 4B W 25	AMS 4B W 30	AMS 4B W 35	AMS 4B W 45
Additional wipers:						
Additional wipers NBR	ZBN 15	ZBN 20	ZBN 25	ZBN 30	ZBN 35	ZBN 45
Additional wipers Viton	ZBV 15	ZBV 20	ZBV 25	ZBV 30	ZBV 35	ZBV 45
Metal wiper	ABM 15-A	ABM 20-A	ABM 25-A	ABM 30-A	ABM 35-A	ABM 45-A
Bellows:						
Bellows	-	FBB 20	FBB 25	FBB 30	FBB 35	FBB 45
Adapter plate for bellows (spare part)	-	ZPB 20	ZPB 25	ZPB 30	ZPB 35	ZPB 45
End plate for bellows (spare part)	-	EPB 20	EPB 25	EPB 30	EPB 35	EPB 45
Assembly rails:						
Assembly rail	MBM 15	MBM 20	MBM 25	MBM 30	MBM 35	MBM 45
Lubrication plates:						
Lubrication plate	SPL 15-BM	SPL 20-BM	SPL 25-BM	SPL 30-BM	SPL 35-BM	SPL 45-BM
Front plates:						
Cross wiper for front plate (spare part)	QAS 15-STB	QAS 20-STB	QAS 25-STB	QAS 30-STB	QAS 35-STB	QAS 45-STB
Lube nippels:						
Hydraulic-type grease nipple straight	-	SN 6	SN 6	SN 6	SN 6	SN 6
Hydraulic-type grease nipple 45°	-	SN 6-45	SN 6-45	SN 6-45	SN 6-45	SN 6-45
Hydraulic-type grease nipple 90°	-	SN 6-90	SN 6-90	SN 6-90	SN 6-90	SN 6-90
Flush type grease nipple M3	SN 3-T	SN 3-T	-	-	-	-
Flush type grease nipple M6	-	SN 6-T	SN 6-T	SN 6-T	SN 6-T	SN 6-T
Grease gun for SN 3-T und SN 6-T	SFP-T3	SFP-T3	SFP-T3	SFP-T3	SFP-T3	SFP-T3
Lube adapters:						
Straight screw-in connection M3	SA 3-D3	SA 3-D3	-	-	-	-
Lubrication adapter M8 round-head	-	SA 6-RD-M8	SA 6-RD-M8	SA 6-RD-M8	SA 6-RD-M8	SA 6-RD-M8
Lubrication adapter M8 hexagon head	-	-	-	SA 6-6KT-M8	SA 6-6KT-M8	SA 6-6KT-M8
Lubrication adapter G1/8 hexagon head	-	-	-	SA 6-6KT-G1/8	SA 6-6KT-G1/8	SA 6-6KT-G1/8
Swivel screw connection for pipe d=4 mm	-	SV 6-D4	SV 6-D4	SV 6-D4	SV 6-D4	SV 6-D4
Swivel screw connection M6	-	SV 6-M6	SV 6-M6	SV 6-M6	SV 6-M6	SV 6-M6
Swivel screw connection M6 long	-	SV 6-M6-L	SV 6-M6-L	SV 6-M6-L	SV 6-M6-L	SV 6-M6-L
Swivel screw connection M8	-	SV 6-M8	SV 6-M8	SV 6-M8	SV 6-M8	SV 6-M8
Swivel screw connection M8 long	-	SV 6-M8-L	SV 6-M8-L	SV 6-M8-L	SV 6-M8-L	SV 6-M8-L
Cables:						
Connecting cable, 12-pole	KAO 12-X	KAO 12-X	KAO 12-X	KAO 12-X	KAO 12-X	KAO 12-X
Connecting cable, 12-pole	KAO 13-X	KAO 13-X	KAO 13-X	KAO 13-X	KAO 13-X	KAO 13-X
Connecting cable, 12-pole	KAO 14-X	KAO 14-X	KAO 14-X	KAO 14-X	KAO 14-X	KAO 14-X
Connecting cable, 12-pole	KAO 15-X	KAO 15-X	KAO 15-X	KAO 15-X	KAO 15-X	KAO 15-X
Connecting cable, 12-pole	KAO 16-X	KAO 16-X	KAO 16-X	KAO 16-X	KAO 16-X	KAO 16-X

8.4 Order key Analog

Individual guide rails and carriages are ordered in accordance with the order codes described below.
AMS 4B carriages consist of guide carriage, casing and reading head.
All MONORAIL BM carriages can also be used with AMS 4B rails.
Q.v. chapter 2 and chapter 4.3 for the order key for accessories.
Separate order codes are used in each case for rails, carriages and accessories. This also applies to different versions of rails and carriages.
All guide components are supplied individually as standard, i.e. unassembled.
If required, SCHNEEBERGER can also supply rails and carriages assembled incl. accessories as complete systems. Please note the ordering instructions in chapter 2.4 if this applies.
The order code for the AMS 4B systems is made up of two groups. For the AMS system with an anolog interface, the code is AMSA. The AMS system with a digital interface is referred to as AMSD.

Order code for AMSA 4B Rails

	1x	AMSA 4B S	25	-N	-G3	-KC	-R12	-958	-29	-29	-CN	-TR50
Quantity												
Rail												
Size												
Type												
Accuracy												
Straightness												
Reference side												
Rail length L3												
Position of first fixing hole L5												
Position of last fixing hole L10												
Coating												
Magnetization												

NB
Q.v. chapter 8.1 to 8.3 for an overview of types, details of shapes, available options and accessories.
Q.v. chapter 2 for a description of the options.
If possible, standard lengths are preferred for L3 rail length.
These are calculated with the table values in chapter 8.2 using the following formula: $L3 = n \times L4 + L5 + L10 \leqslant L3max$.

Order code for AMSA 4B Carriages

	1x	AMSA 4B W	25	-A	-P1	-G3	-V1	-R1	-CN	-S10	-LN	-TSU
Quantity												
Carriage												
Size												
Type												
Reading head position												
Accuracy												
Preload												
Reference side												
Coating												
Lube connection												
Lubrication as delivered condition												
Interface												

NB
Q.v. chapter 8.1 to 8.3 for an overview of types, details of shapes, available options and accessories.
Q.v. chapter 2 for a description of the options.

Order code for AMSD 4B Rails

	1x	AMSD 4B S	25	-N	-G3	-KC	-R12	-958	-29	-29	-CN	-TR50
Quantity												
Rail												
Size												
Type												
Accuracy												
Straightness												
Reference side												
Rail length L3												
Position of first fixing hole L5												
Position of last fixing hole L10												
Coating												
Magnetization												

NB

Q.v. chapter 8.1 to 8.3 for an overview of types, details of shapes, available options and accessories.
Q.v. chapter 2 for a description of the options.
If possible, standard lengths are preferred for L3 rail length.
These are calculated with the table values in chapter 8.2 using the following formula: $L3 = n \times L4 + L5 + L10 \leqslant L3max$.

Order code for AMSD 4B Carriages

	1x	AMSD 4B W	25	-A	-P1	-G3	-V1	-R1	-CN	-S10	-LN	-TSD	-050	-80	ZN
Quantity															
Carriage															
Size															
Type															
Reading head position															
Accuracy															
Preload															
Reference side															
Coating															
Lube connection															
Lubrication as delivered condition															
Interface															
Interpolation															
Frequency															
Reference pulse															

NB

Q.v. chapter 8.1 to 8.3 for an overview of types, details of shapes, available options and accessories.
Q.v. chapter 2 for a description of the options.

9.0 MONORAIL AMSABS 3B

With the MONORAIL AMSABS 3B, SCHNEEBERGER provides an integrated, absolute distance measuring system for use in automation engineering, mechanical handling technology and machine tool engineering, whereby high force absorption and precise distance measurements are required in small assembly spaces. From a mechanical point of view, the AMSABS 3B is based on the MONORAIL MR roller guide up to a length of 6m. The distance measurement system's compact housing facilitates the construction of highly compact axes.
SCHNEEBERGER provides a fully digital interface with various cable lengths in order to connect it with the SSI, SSI+SinCos and FANUC control units.
Various options regarding lubrification and sealing of the measuring carriages mean that optimal adjustments can be made to the requirements of the application. The easily exchangeable reading head is identical and replaceable for all sizes.

Features of System MONORAIL AMSABS 3B

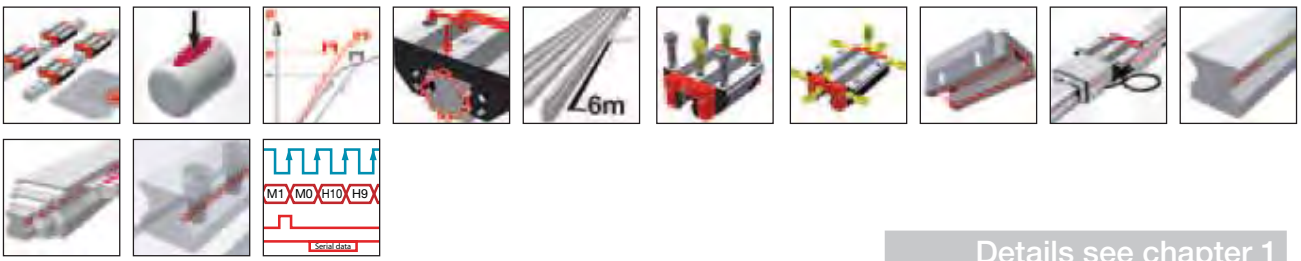

Details see chapter 1

9.1 Overview of types, sizes and available options

9.2 Technical data and options

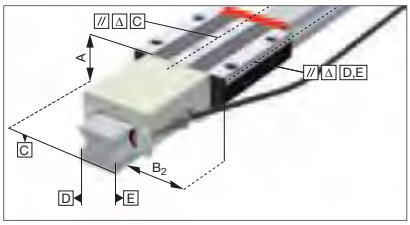

9.3 Accessories MONORAIL AMSABS 3B

9.4 Order key

Product overview AMSABS 3B Rails



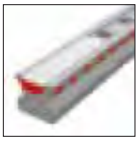

Buildsizes / Rail build forms	N standard	NU With tapped holes at the bottom	C for cover strip				
Size 25	AMSABS 3B S 25-N	AMSABS 3B S 25-NU	AMSABS 3B S 25-C				
Size 35	AMSABS 3B S 35-N	AMSABS 3B S 35-NU	AMSABS 3B S 35-C				
Size 45	AMSABS 3B S 45-N	AMSABS 3B S 45-NU	AMSABS 3B S 45-C				
Size 55	AMSABS 3B S 55-N	AMSABS 3B S 55-NU	AMSABS 3B S 55-C				
Size 65	AMSABS 3B S 65-N	AMSABS 3B S 65-NU	AMSABS 3B S 65-C				
Features							
Screwable from above	●	●	●				
Screwable from below							
Small assembly effort		●	●				
Great single-part system length	●	●	●				

Available options for AMSABS 3B Rails

Details see chapter 2

Accuracy

- G0 Highly accurate
- G1 Very accurate
- G2 Accurate
- G3 Standard

Straightness

- KC Standard

Coating

- CN None
- CH Hard chromium

Locating sides

- R11 Ref.bottom, scale bottom
- R12 Ref.bottom, scale top
- R21 Ref.top, scale bottom
- R22 Ref.top, scale top

Available accessories for AMSABS 3B Rails

Details see chapter 3.3

Plugs

Cover strips

Assembly tools

Product overview AMSABS 3B Carriages

Buildsizes / Carriage build forms	A standard	B standard, long	C compact, high	D compact, high, long			
Size 25	AMSABS 3B W 25-A	AMSABS 3B W 25-B	AMSABS 3B W 25-C	AMSABS 3B W 25-D			
Size 35	AMSABS 3B W 35-A	AMSABS 3B W 35-B	AMSABS 3B W 35-C	AMSABS 3B W 35-D			
Size 45	AMSABS 3B W 45-A	AMSABS 3B W 45-B	AMSABS 3B W 45-C	AMSABS 3B W 45-D			
Size 55	AMSABS 3B W 55-A	AMSABS 3B W 55-B	AMSABS 3B W 55-C	AMSABS 3B W 55-D			
Size 65	AMSABS 3B W 65-A	AMSABS 3B W 65-B	AMSABS 3B W 65-C	AMSABS 3B W 65-D			
Features							
Screwable from above	●	●	●	●			
Screwable from below	●	●					
For high loads and moments		●		●			
For medium loads and moments	●		●				

Available options for AMSABS 3B Carriages

Details see chapter 2

Accuracy
- G0 Highly accurate
- G1 Very accurate
- G2 Accurate
- G3 Standard

Preload
- V1 Low
- V2 Medium
- V3 High

Reference side
- R1 Ref. at bottom
- R2 Ref. on top

Coating
- CN None
- CH Hard chromium

Lube connections
- S10 Left center
- S20 Right center
- S11 Top left
- S21 Top right
- S12 Lower left side
- S22 Lower right side
- S13 Upper left side
- S23 Upper right side
- S32 Left side
- S42 Right side

Lubrication
- LN Oil protect
- LG Grease protect
- LV Full greasing

Interface
- TMH TMH, absolute, 0.3m
- TSH TSH, absolute, 3m

Reading head position
- P1 Right top
- P3 Left bottom

Available accessories for AMSABS 3B Carriages

Details see chapter 2.1 and 3.3

Additional wipers
Front plates
Bellows
Lube nippels
Assembly rails
Lube adapters
Lubrication plates
Cables

AMSABS 3B S 25 Drawings

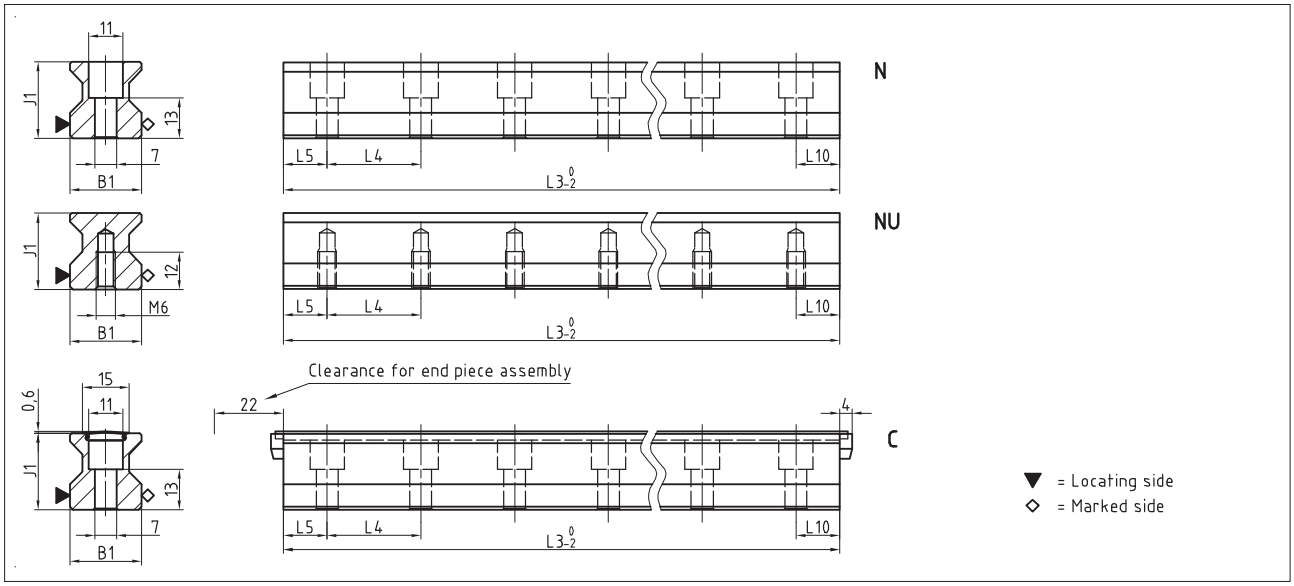

AMSABS 3B W 25 Drawings

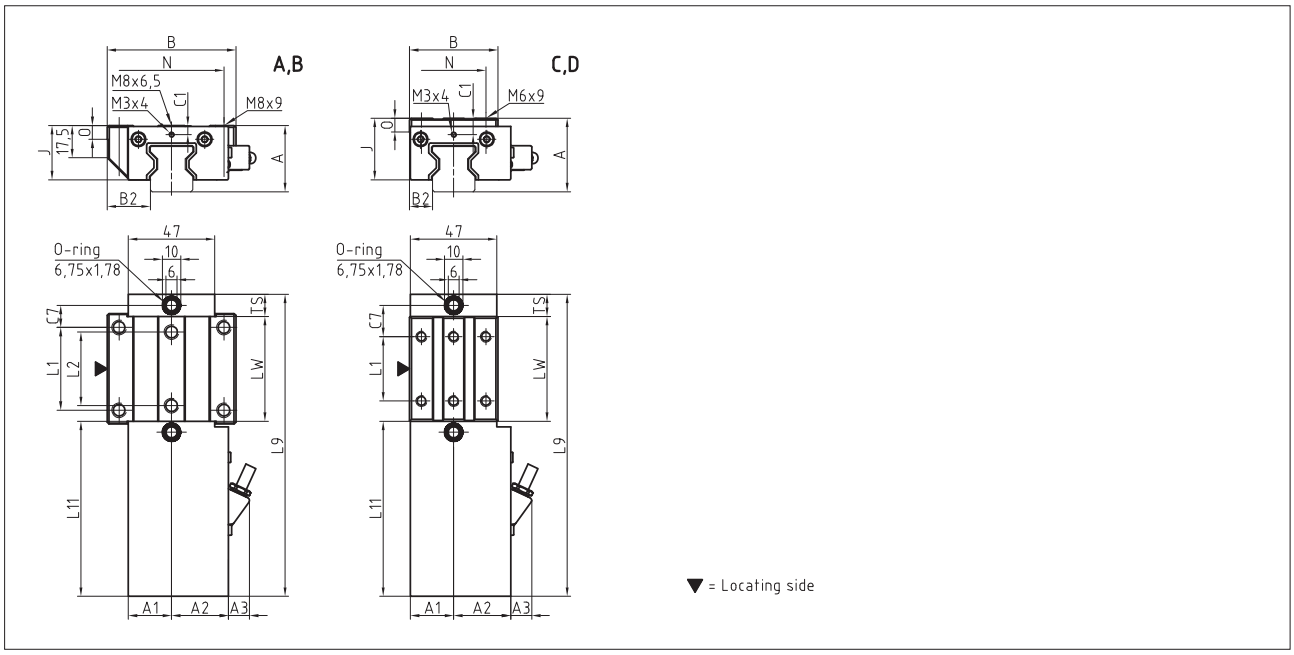

AMSABS 3B W 25 Rigidity diagram

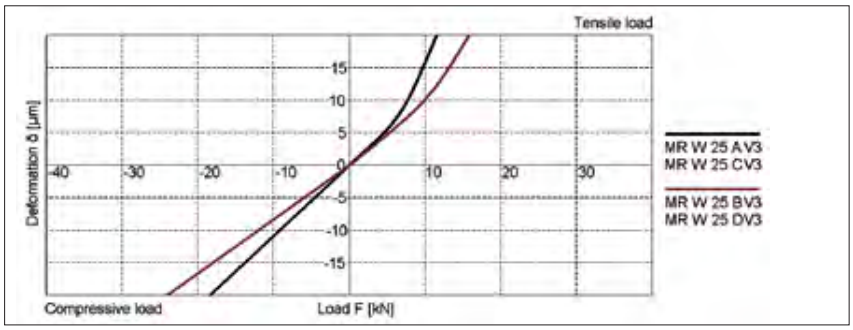

AMSABS 3B W 25 Load rating

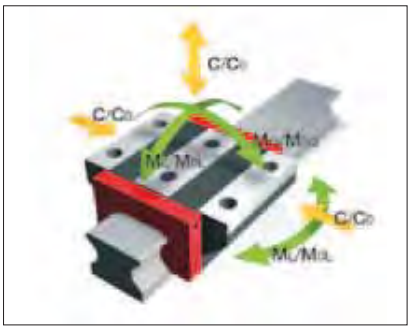

AMSABS 3B S 25 Dimensions



	AMSABS 3B S 25-N	AMSABS 3B S 25-NU	AMSABS 3B S 25-C				
B1: Rail width	23	23	23				
J1: Rail height	24.5	24.5	24.5				
L3: Rail length max.	6000	6000	3000				
L4: Spacing of fixing holes	30	30	30				
L5/L10: Position of first/last fixing hole	13.5	13.5	13.5				
Gew.: Rail weight, specific (kg/m)	3.4	3.8	3.3				

Available options for AMSABS 3B S 25

AMSABS 3B W 25 Dimensions and capacities




	AMSABS 3B W 25-A	AMSABS 3B W 25-B	AMSABS 3B W 25-C	AMSABS 3B W 25-D			
A: System height	36	36	40	40			
A1: Half width of housing on opposite side	23.5	23.5	23.5	23.5			
A2: Half width of housing on reading head side	31	31	31	31			
A3: Projection of reading head	11.5	11.5	11.5	11.5			
B: Carriage width	70	70	48	48			
B2: Distance between locating faces	23.5	23.5	12.5	12.5			
C1: Position of center front lube hole*	5 / 5.5	5 / 5.5	9 / 9.5	9 / 9.5			
C3: Position of lateral lube hole	-	-	-	-			
C4: Position of lateral lube hole	-	-	-	-			
C7: Position of top lube hole	12	23.2	17	20.7			
J: Carriage height	29.5	29.5	33.5	33.5			
L1: Exterior fixing hole spacing	45	45	35	50			
L2: Interior fixing hole spacing	40	40	-	-			
L9: Carriage length with housing	164.2	186.6	164.2	186.6			
L11: Housing length	95.2	95.2	95.2	95.2			
Lw: Inner carriage body length	57	79.4	57	79.4			
N: Lateral fixing hole spacing	57	57	35	35			
O: Reference face height	7.5	7.5	7.5	7.5			
Ts: Front plate thickness	12	12	12	12			
Capacities and weights							
C0: Static load capacitiy (N)	49800	70300	49800	70300			
C100: Dynamic load capacity (N)	27700	39100	27700	39100			
M0Q: Static cross moment capacity (Nm)	733	1035	733	1035			
M0L: Static longitud. moment capacity (Nm)	476	936	476	936			
MQ: Dyn. cross moment capacity (Nm)	408	576	408	576			
ML: Dyn. longitud. moment capacity (Nm)	265	521	265	521			
Gew: Carriage weight (kg)	1.0	1.2	0.9	1.0			

Note: * Values valid for external housing / front plate

Available options for AMSABS 3B W 25

AMSABS 3B S 35 Drawings

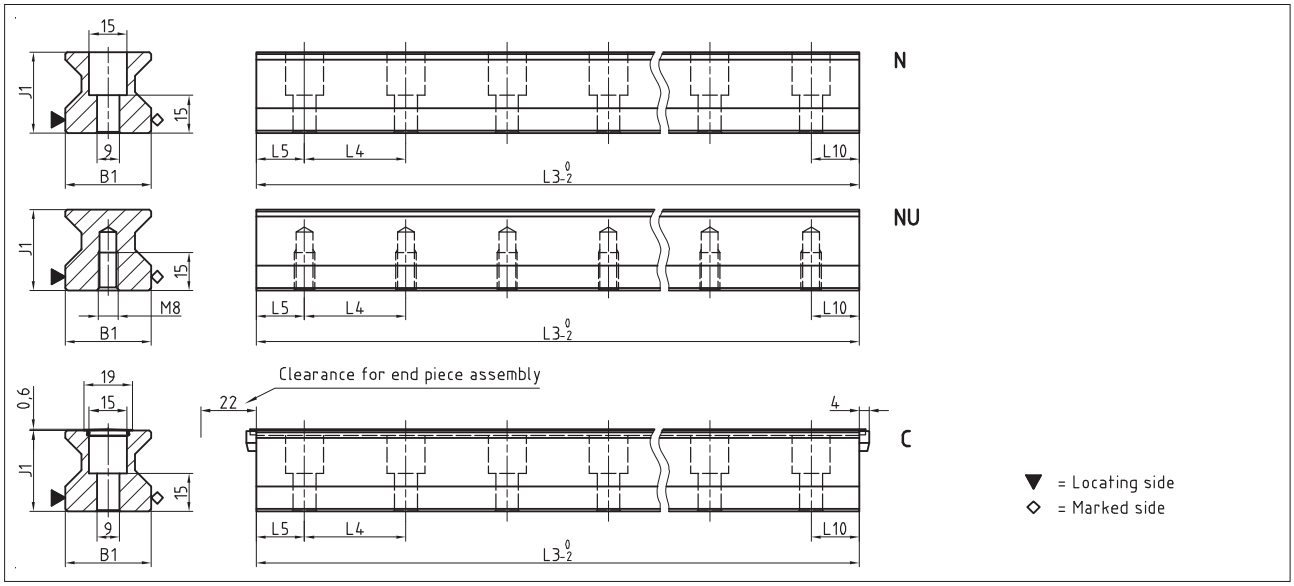

AMSABS 3B W 35 Drawings

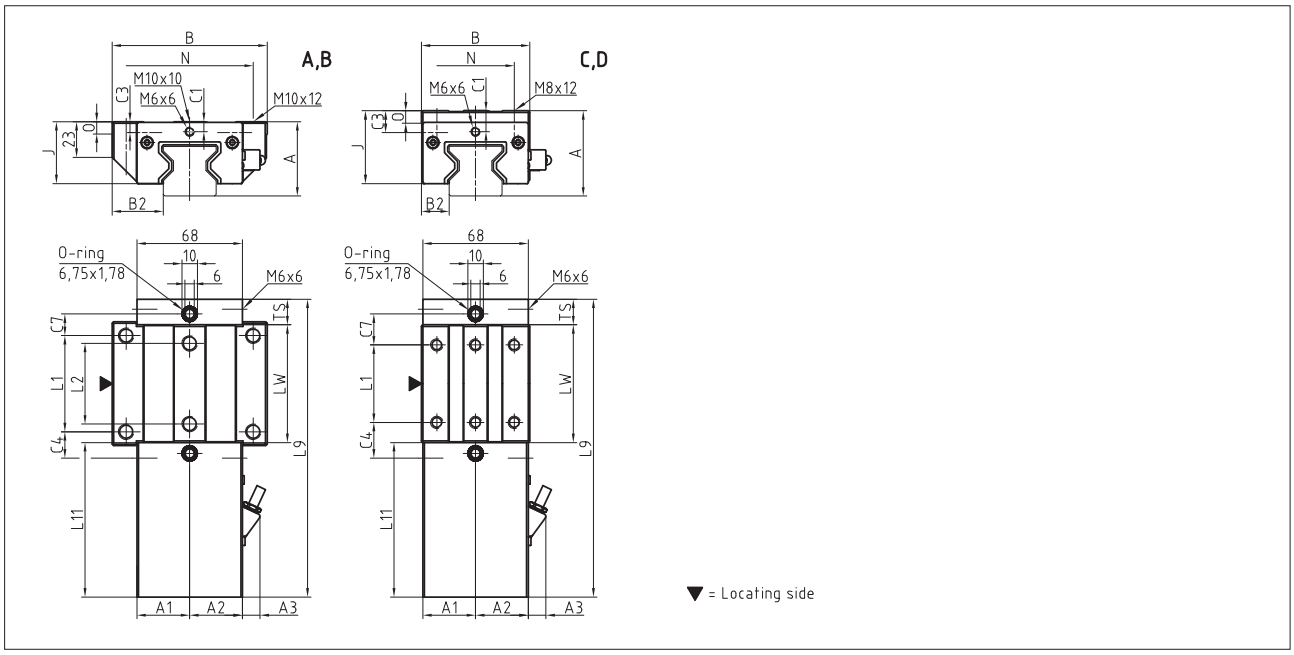

AMSABS 3B W 35 Rigidity diagram

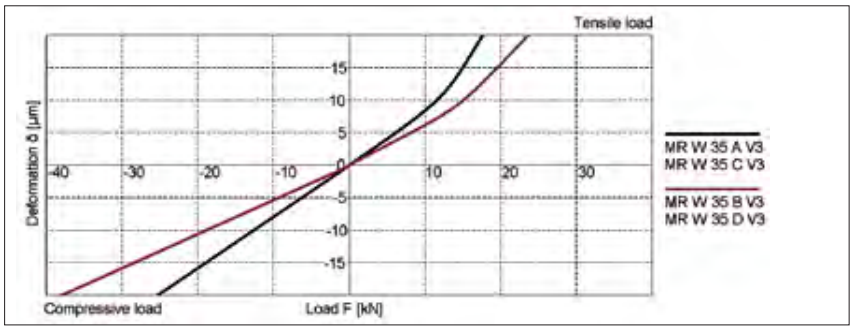

AMSABS 3B W 35 Load rating

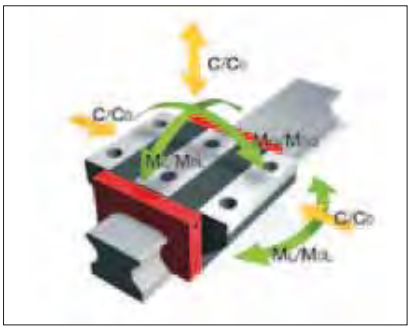

AMSABS 3B S 35 Dimensions



	AMSABS 3B S 35-N	AMSABS 3B S 35-NU	AMSABS 3B S 35-C
B1: Rail width	34	34	34
J1: Rail height	32	32	32
L3: Rail length max.	6000	6000	6000
L4: Spacing of fixing holes	40	40	40
L5/L10: Position of first/last fixing hole	18.5	18.5	18.5
Gew.: Rail weight, specific (kg/m)	6.5	7.1	6.3

Available options for AMSABS 3B S 35

AMSABS 3B W 35 Dimensions and capacities




	AMSABS 3B W 35-A	AMSABS 3B W 35-B	AMSABS 3B W 35-C	AMSABS 3B W 35-D
A: System height	48	48	55	55
A1: Half width of housing on opposite side	34	34	34	34
A2: Half width of housing on reading head side	34	34	34	34
A3: Projection of reading head	11.5	11.5	11.5	11.5
B: Carriage width	100	100	70	70
B2: Distance between locating faces	33	33	18	18
C1: Position of center front lube hole*	6.5 / 7	6.5 / 7	13.5 / 14	13.5 / 14
C3: Position of lateral lube hole	7	7	14	14
C4: Position of lateral lube hole	17	30.5	23	25.5
C7: Position of top lube hole	14	27.5	20	22.5
J: Carriage height	40	40	47	47
L1: Exterior fixing hole spacing	62	62	50	72
L2: Interior fixing hole spacing	52	52	-	-
L9: Carriage length with housing	192.2	219.2	192.2	219.2
L11: Housing length	99.7	99.7	99.7	99.7
Lw: Inner carriage body length	76	103	76	103
N: Lateral fixing hole spacing	82	82	50	50
O: Reference face height	8	8	8	8
Ts: Front plate thickness	16.5	16.5	16.5	16.5
Capacities and weights				
C0: Static load capacitiy (N)	93400	128500	93400	128500
C100: Dynamic load capacity (N)	52000	71500	52000	71500
M0Q: Static cross moment capacity (Nm)	2008	2762	2008	2762
M0L: Static longitud. moment capacity (Nm)	1189	2214	1189	2214
MQ: Dyn. cross moment capacity (Nm)	1118	1537	1118	1537
ML: Dyn. longitud. moment capacity (Nm)	662	1232	662	1232
Gew: Carriage weight (kg)	2.0	2.6	1.9	2.4

Note: * Values valid for external housing / front plate

Available options for AMSABS 3B W 35

AMSABS 3B S 45 Drawings

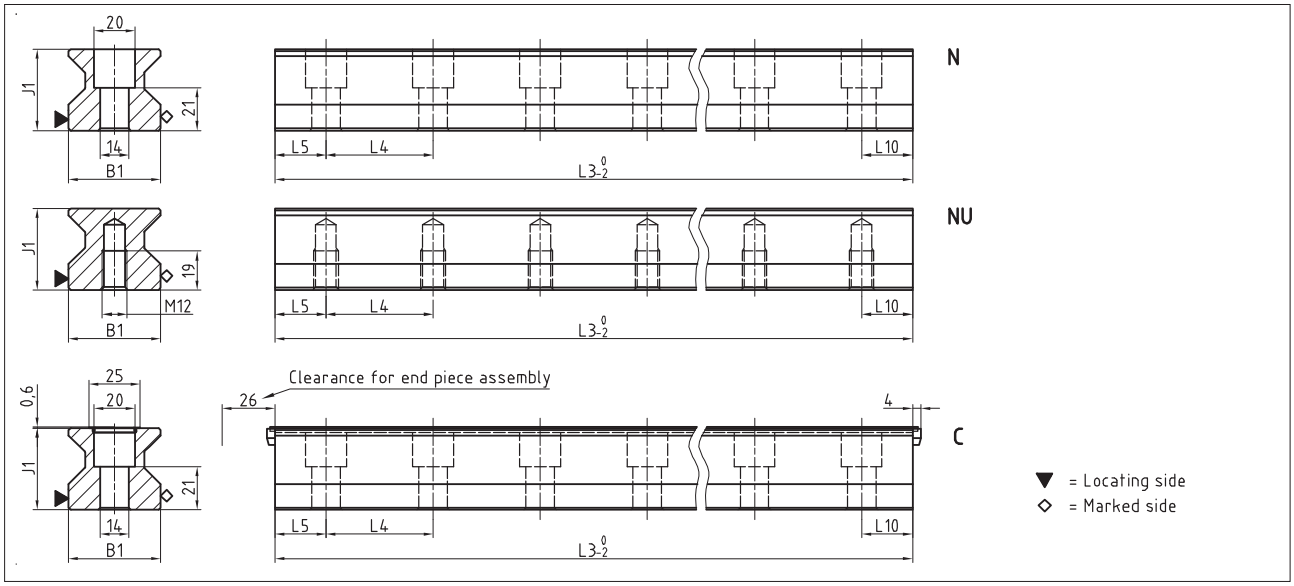

AMSABS 3B W 45 Drawings

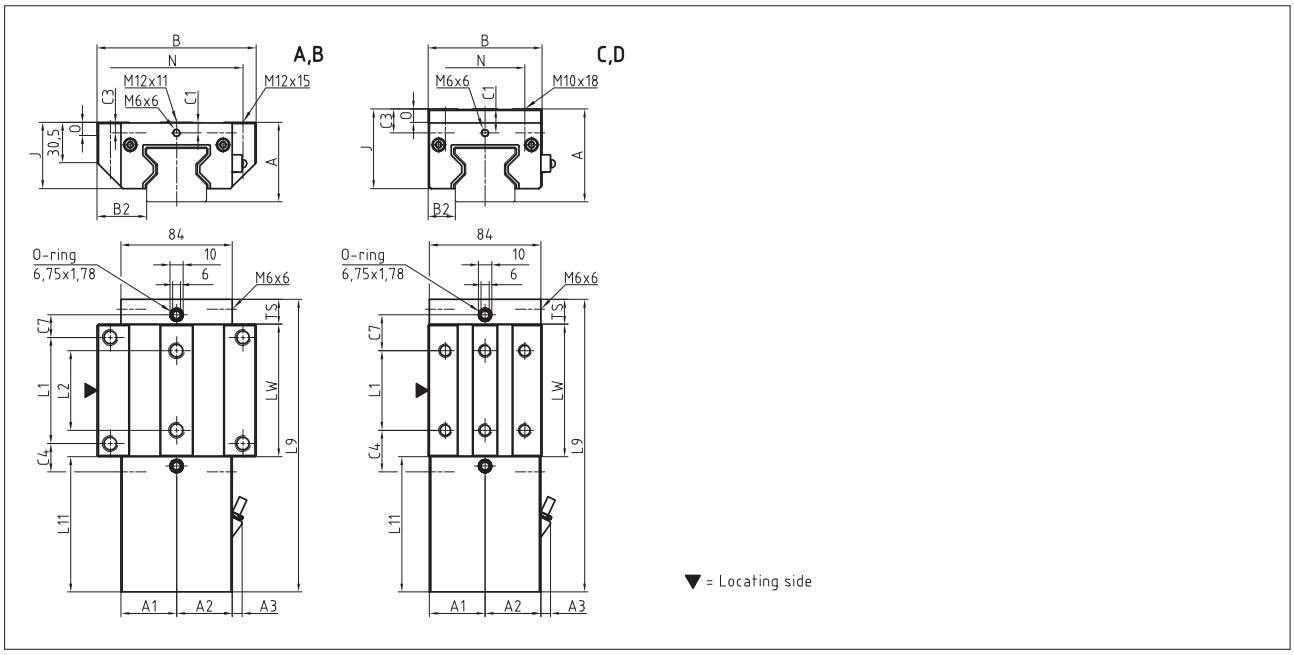

AMSABS 3B W 45 Rigidity diagram

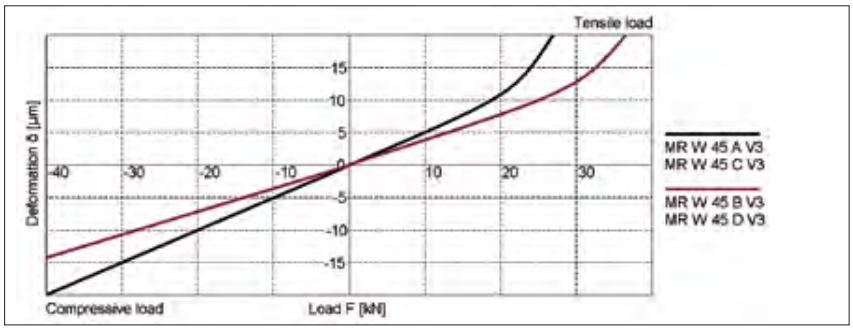

AMSABS 3B W 45 Load rating

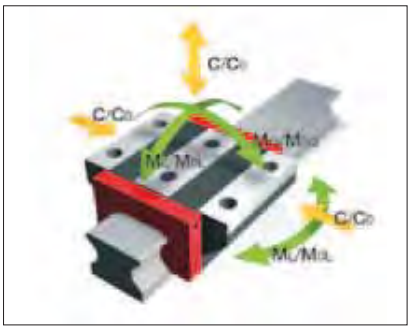

AMSABS 3B S 45 Dimensions


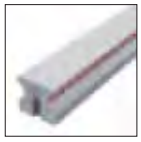
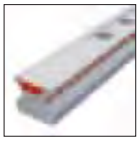

	AMSABS 3B S 45-N	AMSABS 3B S 45-NU	AMSABS 3B S 45-C				
B1: Rail width	45	45	45				
J1: Rail height	40	40	40				
L3: Rail length max.	6000	6000	6000				
L4: Spacing of fixing holes	52.5	52.5	52.5				
L5/L10: Position of first/last fixing hole	25	25	25				
Gew.: Rail weight, specific (kg/m)	10.8	11.8	10.6				

Available options for AMSABS 3B S 45

AMSABS 3B W 45 Dimensions and capacities




	AMSABS 3B W 45-A	AMSABS 3B W 45-B	AMSABS 3B W 45-C	AMSABS 3B W 45-D			
A: System height	60	60	70	70			
A1: Half width of housing on opposite side	42	42	42	42			
A2: Half width of housing on reading head side	42	42	42	42			
A3: Projection of reading head	7.5	7.5	7.5	7.5			
B: Carriage width	120	120	86	86			
B2: Distance between locating faces	37.5	37.5	20.5	20.5			
C1: Position of center front lube hole	8	8	18	18			
C3: Position of lateral lube hole	8	8	18	18			
C4: Position of lateral lube hole	21.25	38.75	31.25	38.75			
C7: Position of top lube hole	17	34.5	27	34.5			
J: Carriage height	50	50	60	60			
L1: Exterior fixing hole spacing	80	80	60	80			
L2: Interior fixing hole spacing	60	60	-	-			
L9: Carriage length with housing	220.7	255.7	220.7	255.7			
L11: Housing length	101.9	101.9	101.9	101.9			
Lw: Inner carriage body length	100	135	100	135			
N: Lateral fixing hole spacing	100	100	60	60			
O: Reference face height	10	10	10	10			
Ts: Front plate thickness	18.8	18.8	18.8	18.8			
Capacities and weights							
C0: Static load capacitiy (N)	167500	229500	167500	229500			
C100: Dynamic load capacity (N)	93400	127800	93400	127800			
M0Q: Static cross moment capacity (Nm)	4621	6333	4621	6333			
M0L: Static longitud. moment capacity (Nm)	2790	5161	2790	5161			
MQ: Dyn. cross moment capacity (Nm)	2577	3527	2577	3527			
ML: Dyn. longitud. moment capacity (Nm)	1556	2874	1556	2874			
Gew: Carriage weight (kg)	3.8	4.9	3.6	4.6			

Available options for AMSABS 3B W 45

AMSABS 3B S 55 Drawings

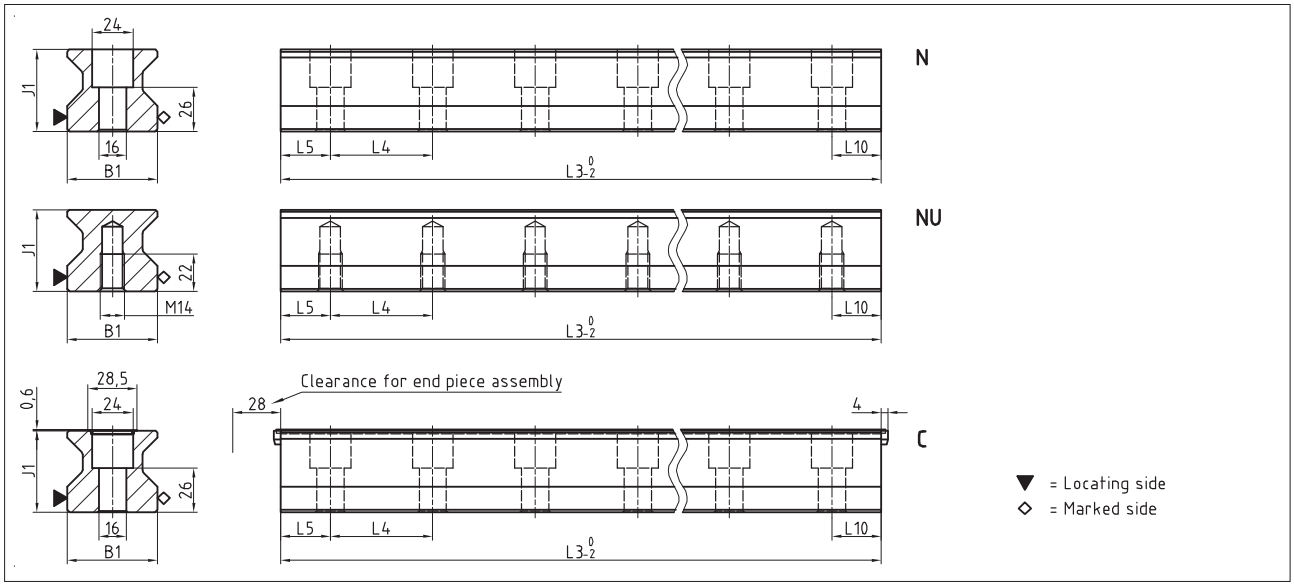

AMSABS 3B W 55 Drawings

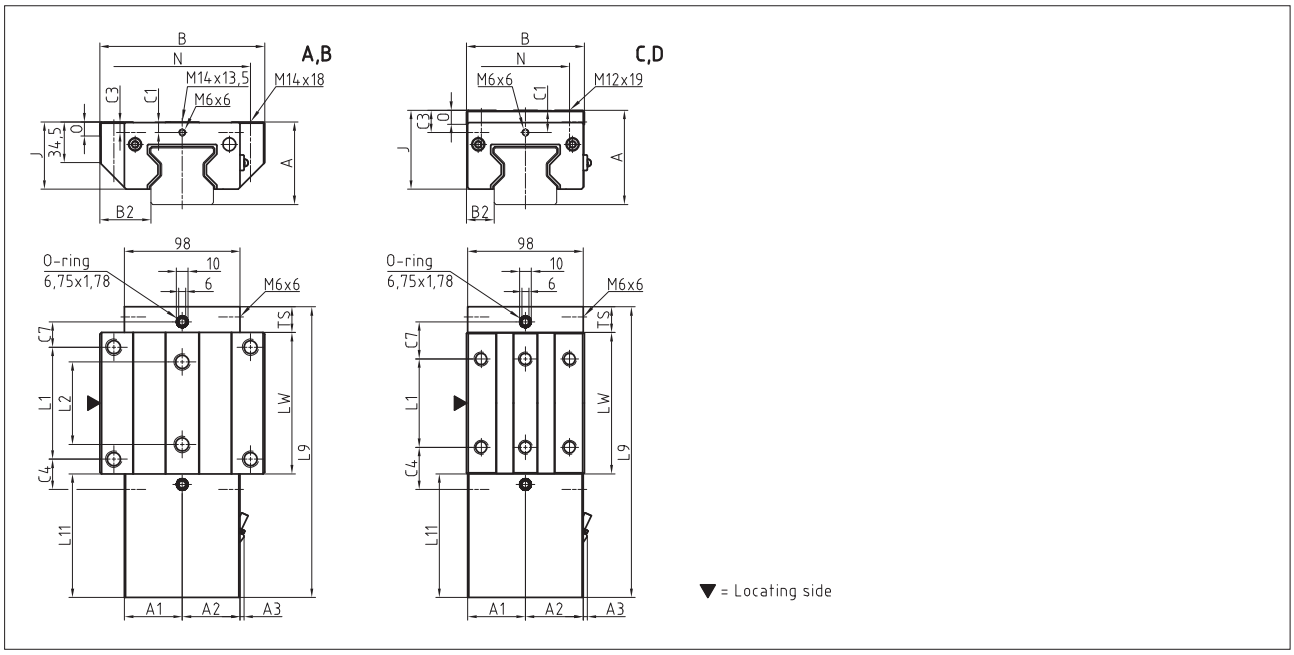

AMSABS 3B W 55 Rigidity diagram

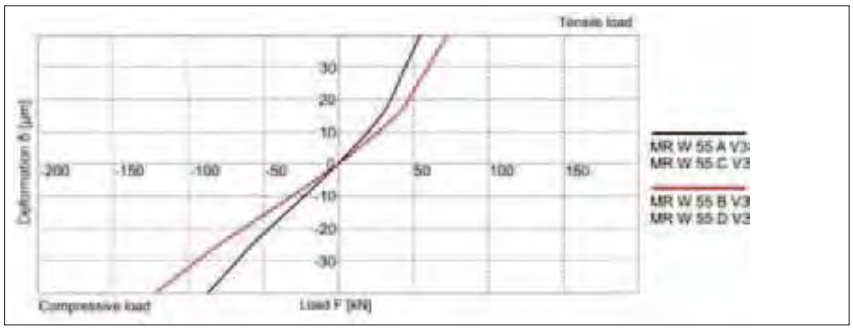

AMSABS 3B W 55 Load rating

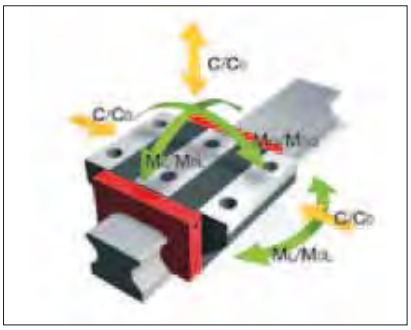

AMSABS 3B S 55 Dimensions



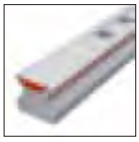

	AMSABS 3B S 55-N	AMSABS 3B S 55-NU	AMSABS 3B S 55-C				
B1: Rail width	53	53	53				
J1: Rail height	48	48	48				
L3: Rail length max.	6000	6000	6000				
L4: Spacing of fixing holes	60	60	60				
L5/L10: Position of first/last fixing hole	28.5	28.5	28.5				
Gew.: Rail weight, specific (kg/m)	15.2	16.6	14.9				

Available options for AMSABS 3B S 55

AMSABS 3B W 55 Dimensions and capacities




	AMSABS 3B W 55-A	AMSABS 3B W 55-B	AMSABS 3B W 55-C	AMSABS 3B W 55-D			
A: System height	70	70	80	80			
A1: Half width of housing on opposite side	49	49	49	49			
A2: Half width of housing on reading head side	49	49	49	49			
A3: Projection of reading head	3.5	3.5	3.5	3.5			
B: Carriage width	140	140	100	100			
B2: Distance between locating faces	43.5	43.5	23.5	23.5			
C1: Position of center front lube hole	9	9	19	19			
C3: Position of lateral lube hole	9	9	19	19			
C4: Position of lateral lube hole	25.75	46.75	35.75	46.75			
C7: Position of top lube hole	21.5	42.5	31.5	42.5			
J: Carriage height	57	57	67	67			
L1: Exterior fixing hole spacing	95	95	75	95			
L2: Interior fixing hole spacing	70	70	-	-			
L9: Carriage length with housing	246.7	288.7	246.7	288.7			
L11: Housing length	104.9	104.9	104.9	104.9			
Lw: Inner carriage body length	120	162	120	162			
N: Lateral fixing hole spacing	116	116	75	75			
O: Reference face height	12	12	12	12			
Ts: Front plate thickness	21.8	21.8	21.8	21.8			
Capacities and weights							
C0: Static load capacitiy (N)	237000	324000	237000	324000			
C100: Dynamic load capacity (N)	131900	180500	131900	180500			
MOQ: Static cross moment capacity (Nm)	7771	10624	7771	10624			
MOL: Static longitud. moment capacity (Nm)	4738	8745	4738	8745			
MQ: Dyn. cross moment capacity (Nm)	4325	5919	4325	5919			
ML: Dyn. longitud. moment capacity (Nm)	2637	4872	2637	4872			
Gew: Carriage weight (kg)	5.8	7.6	5.3	6.9			

Available options for AMSABS 3B W 55

AMSABS 3B S 65 Drawings

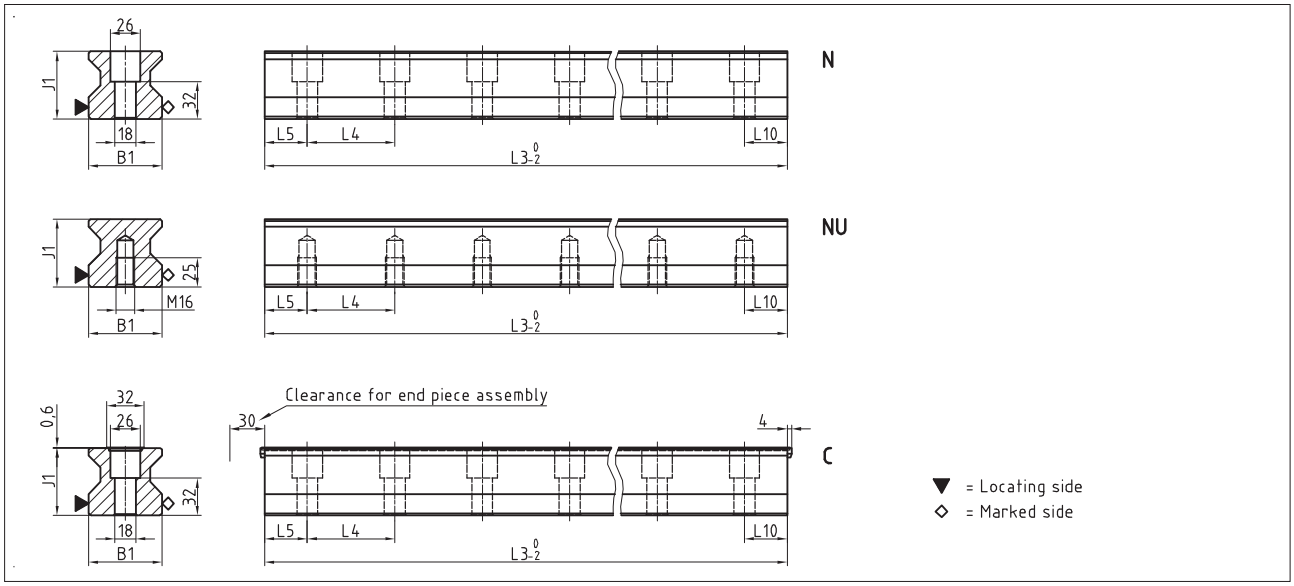

AMSABS 3B W 65 Drawings

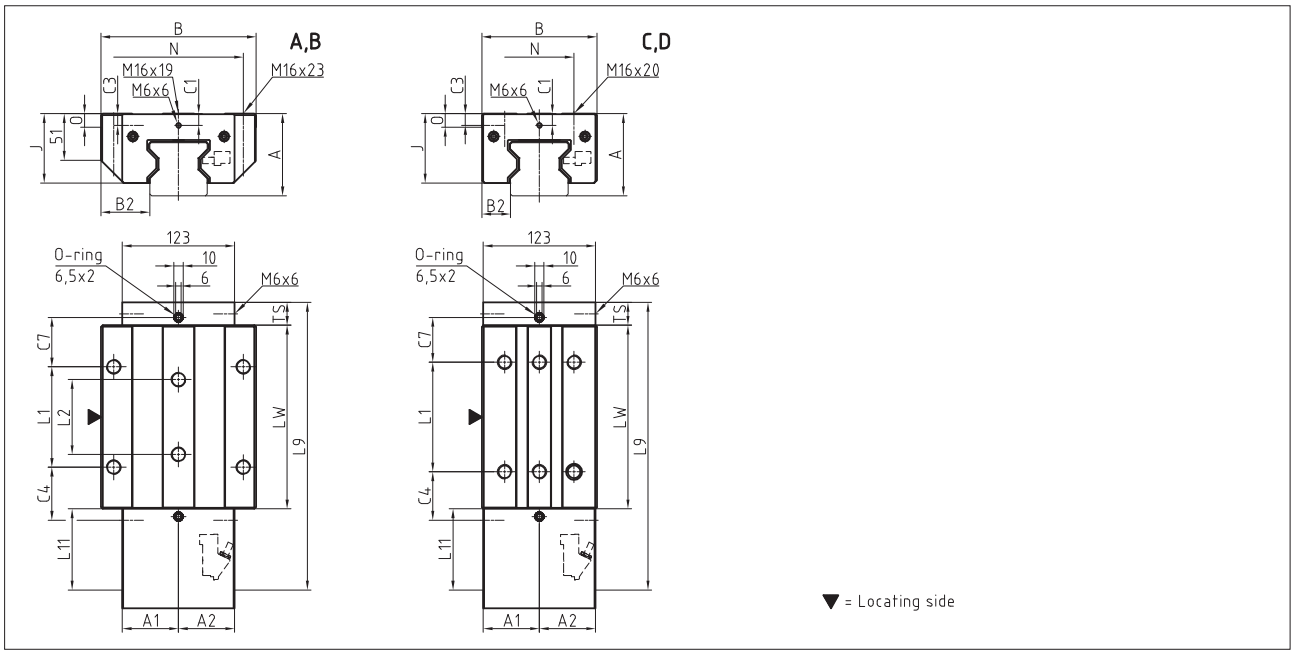

AMSABS 3B W 65 Rigidity diagram

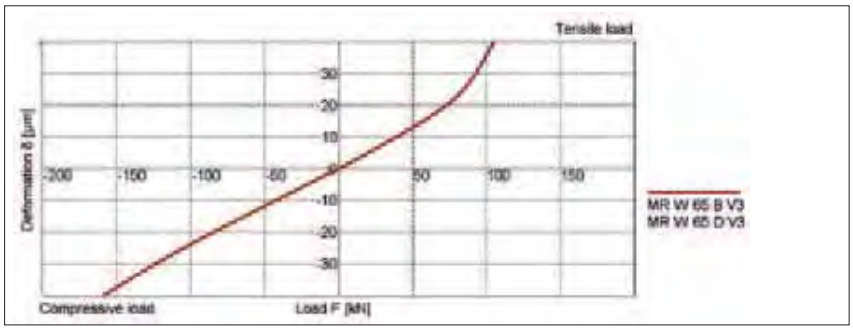

AMSABS 3B W 65 Load rating

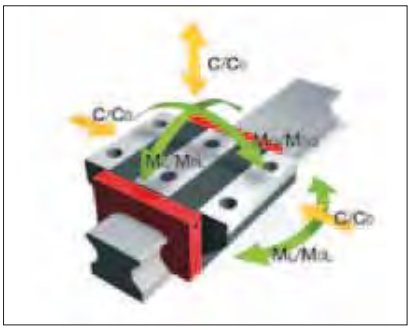

AMSABS 3B S 65 Dimensions



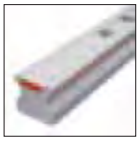

	AMSABS 3B S 65-N	AMSABS 3B S 65-NU	AMSABS 3B S 65-C				
B1: Rail width	63	63	63				
J1: Rail height	58	58	58				
L3: Rail length max.	6000	6000	6000				
L4: Spacing of fixing holes	75	75	75				
L5/L10: Position of first/last fixing hole	36	36	36				
Gew.: Rail weight, specific (kg/m)	22.8	24.5	22.5				

Available options for AMSABS 3B S 65

AMSABS 3B W 65 Dimensions and capacities




	AMSABS 3B W 65-A	AMSABS 3B W 65-B	AMSABS 3B W 65-C	AMSABS 3B W 65-D			
A: System height	90	90	90	90			
A1: Half width of housing on opposite side	61.5	61.5	61.5	61.5			
A2: Half width of housing on reading head side	61.5	61.5	61.5	61.5			
A3: Projection of reading head	0	0	0	0			
B: Carriage width	170	170	126	126			
B2: Distance between locating faces	53.5	53.5	31.5	31.5			
C1: Position of center front lube hole	13	13	13	13			
C3: Position of lateral lube hole	13	13	13	13			
C4: Position of lateral lube hole	31.75	58	51.75	53			
C7: Position of top lube hole	27.75	54	47.75	49			
J: Carriage height	76	76	76	76			
L1: Exterior fixing hole spacing	110	110	70	120			
L2: Interior fixing hole spacing	82	82	-	-			
L9: Carriage length with housing	282.5	335	282.5	335			
L11: Housing length	109	109	109	109			
Lw: Inner carriage body length	148.5	201	148.5	201			
N: Lateral fixing hole spacing	142	142	76	76			
O: Reference face height	15	15	15	15			
Ts: Front plate thickness	25	25	25	25			
Capacities and weights							
C0: Static load capacitiy (N)	419 000	530 000	419 000	530 000			
C100: Dynamic load capacity (N)	232 000	295 000	232 000	295 000			
MOQ: Static cross moment capacity (Nm)	16 446	20 912	16 446	20 912			
MOL: Static longitud. moment capacity (Nm)	10 754	17 930	10 754	17 930			
MQ: Dyn. cross moment capacity (Nm)	9 154	11 640	9 154	11 640			
ML: Dyn. longitud. moment capacity (Nm)	5 954	9 980	5 954	9 980			
Gew: Carriage weight (kg)	11.6	14.9	9.3	11.8			

Available options for AMSABS 3B W 65

AMSABS 3B Rails accessories overview

Accessories	AMSABS 3B S 25	AMSABS 3B S 35	AMSABS 3B S 45	AMSABS 3B S 55	AMSABS 3B S 65
Plugs:					
Plastic plugs	MRK 25	MRK 35	MRK 45	MRK 55	MRK 65
Brass plugs	MRS 25	MRS 35	MRS 45	MRS 55	MRS 65
Steel plugs	MRZ 25	MRZ 35	MRZ 45	MRZ 55	MRZ 65
Cover strips:					
Cover strip (spare part)	MAC 25	MAC 35	MAC 45	MAC 55	MAC 65
End piece for cover strip (spare part)	EST 25-MAC	EST 35-MAC	EST 45-MAC	EST 55-MAC	EST 65-MAC
Securing band for cover strip (spare part)	BSC 25-MAC	BSC 35-MAC	BSC 45-MAC	BSC 55-MAC	BSC 65-MAC
Assembly tools:					
Installation tool for steel plugs	MWH 25	MWH 35	MWH 45	MWH 55	MWH 65
Hydraulic cylinder for MWH	MZH	MZH	MZH	MZH	MZH
Installation tool for cover strip	MWC 25	MWC 35	MWC 45	MWC 55	MWC 65

AMSABS 3B Carriages accessories overview

Accessories	AMSABS 3B W 25	AMSABS 3B W 35	AMSABS 3B W 45	AMSABS 3B W 55	AMSABS 3B W 65
Additional wipers:					
Additional wipers NBR	ZCN 25	ZCN 35	ZCN 45	ZCN 55	ZCN 65
Additional wipers Viton	ZCV 25	ZCV 35	ZCV 45	ZCV 55	ZCV 65
Metal wiper	ASM 25-A	ASM 35-A	ASM 45-A	ASM 55-A	ASM 65-A
Bellows:					
Bellows	FBM 25	FBM 35	FBM 45	FBM 55	FBM 65
Adapter plate for bellows (spare part)	ZPL 25	ZPL 35	ZPL 45	ZPL 55	ZPL 65
End plate for bellows (spare part)	EPL 25	EPL 35	EPL 45	EPL 55	EPL 65
Assembly rails:					
Assembly rail	MRM 25	MRM 35	MRM 45	MRM 55	MRM 65
Lubrication plates:					
Lubrication plate	SPL 25-MR	SPL 35-MR	SPL 45-MR	SPL 55-MR	SPL 65-MR
Front plates:					
Front plate (spare part)	STP 25-EK	STP 35-EK	STP 45-EK	STP 55-EK	STP 65-EK
Lube nippels:					
Hydraulic-type grease nipple straight	SN 6	SN 6	SN 6	SN 6	SN 6
Hydraulic-type grease nipple 45°	SN 6-45	SN 6-45	SN 6-45	SN 6-45	SN 6-45
Hydraulic-type grease nipple 90°	SN 6-90	SN 6-90	SN 6-90	SN 6-90	SN 6-90
Flush type grease nipple M3	SN 3-T	-	-	-	-
Flush type grease nipple M6	SN 6-T	SN 6-T	SN 6-T	SN 6-T	SN 6-T
Grease gun for SN 3-T und SN 6-T	SFP-T3	SFP-T3	SFP-T3	SFP-T3	SFP-T3
Lube adapters:					
Straight screw-in connection M3	SA 3-D3	-	-	-	-
Lubrication adapter M8 round-head	SA 6-RD-M8	SA 6-RD-M8	SA 6-RD-M8	SA 6-RD-M8	SA 6-RD-M8
Lubrication adapter M8 hexagon head	-	SA 6-6KT-M8	SA 6-6KT-M8	SA 6-6KT-M8	SA 6-6KT-M8
Lubrication adapter G1/8 hexagon head	-	SA 6-6KT-G1/8	SA 6-6KT-G1/8	SA 6-6KT-G1/8	SA 6-6KT-G1/8
Swivel screw connection for pipe d=4 mm	SV 6-D4	SV 6-D4	SV 6-D4	SV 6-D4	SV 6-D4
Swivel screw connection M6	SV 6-M6	SV 6-M6	SV 6-M6	SV 6-M6	SV 6-M6
Swivel screw connection M6 long	SV 6-M6-L	SV 6-M6-L	SV 6-M6-L	SV 6-M6-L	SV 6-M6-L
Swivel screw connection M8	SV 6-M8	SV 6-M8	SV 6-M8	SV 6-M8	SV 6-M8
Swivel screw connection M8 long	SV 6-M8-L	SV 6-M8-L	SV 6-M8-L	SV 6-M8-L	SV 6-M8-L

9.4 Order key

Individual guide rails and carriages are ordered in accordance with the order codes described below.
AMSABS 3B carriages consist of guide carriage, casing and reading head.
All MONORAIL MR carriages can also be used with AMSABS 3B rails.
Q.v. chapter 2 and chapter 3.3 for the order key for accessories.
Separate order codes are used in each case for rails, carriages and accessories. This also applies to different versions of rails and carriages.
All guide components are supplied individually as standard, i.e. unassembled.
If required, SCHNEEBERGER can also supply rails and carriages assembled incl. accessories as complete systems. Please note the ordering instructions in chapter 2.4 if this applies.

Order code for AMSABS 3B Rails

	1x	AMSABS 3B S	35	-C	-G1	-KC	-R11	-2936	-28	-28	-CN
Quantity											
Rail											
Size											
Type											
Accuracy											
Straightness											
Reference side											
Rail length L3											
Position of first fixing hole L5											
Position of last fixing hole L10											
Coating											

NB

Q.v. chapter 9.1 to 9.3 for an overview of types, details of shapes, available options and accessories.
Q.v. chapter 2 for a description of the options.
If possible, standard lengths are preferred for L3 rail length.
These are calculated with the table values in chapter 9.2 using the following formula: $L3 = n \times L4 + L5 + L10 \leqslant L3max$.

Order code for AMSABS 3B Carriages

	1x	AMSABS 3B W	35	-B	-P1	-G1	-V3	-R2	-CN	-S12	-LN	-TSH
Quantity												
Carriage												
Size												
Type												
Reading head position												
Accuracy												
Preload												
Reference side												
Coating												
Lube connection												
Lubrication as delivered condition												
Interface												

NB

Q.v. chapter 9.1 to 9.3 for an overview of types, details of shapes, available options and accessories.
Q.v. chapter 2 for a description of the options.
For detailed information about current configuration options for the interfaces, please visit our website at www.schneeberger.com.

10.0 MONORAIL AMSABS 4B

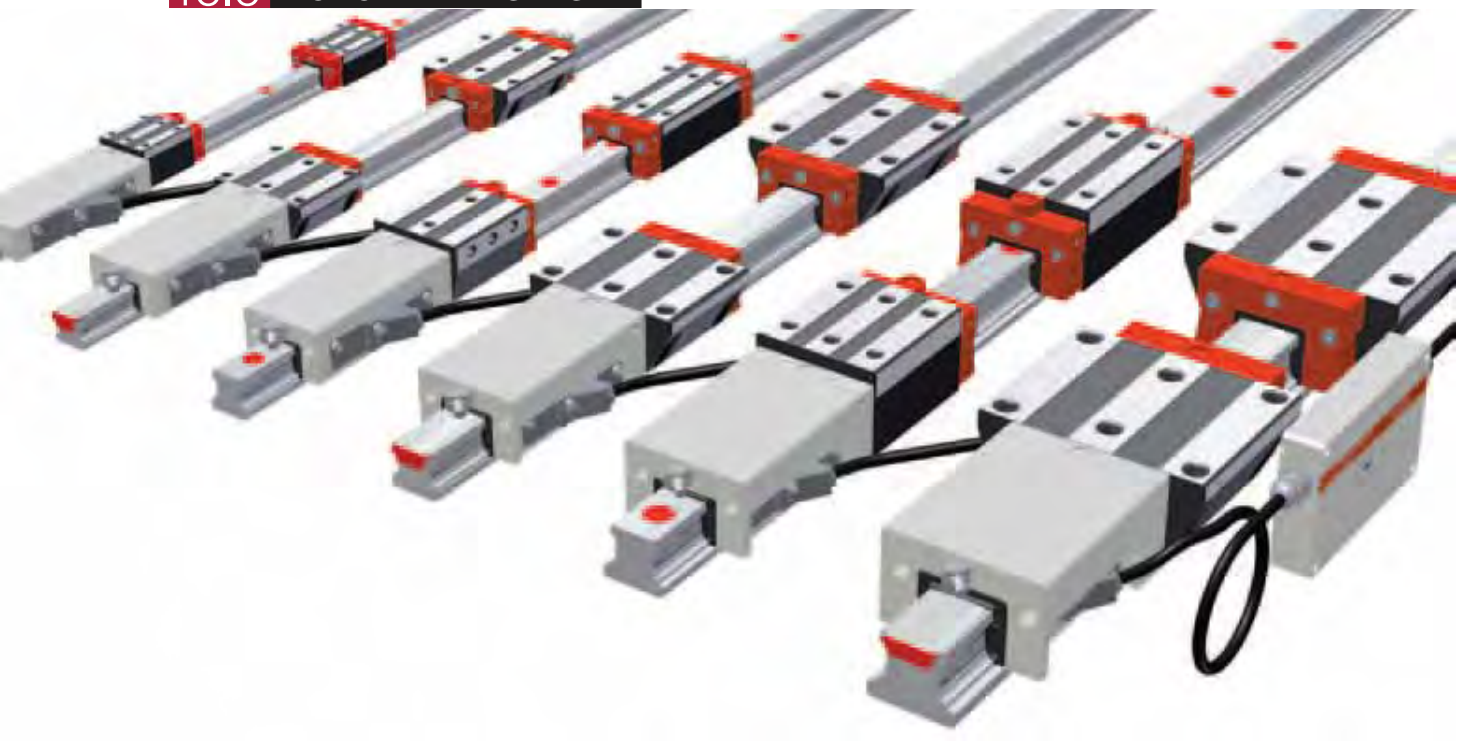

With the MONORAIL AMSABS 4B, SCHNEEBERGER provides an integrated, absolute distance measuring system for use in automation engineering, mechanical handling technology and machine tool engineering, whereby high force absorption and precise distance measurements are required in small assembly spaces. From a mechanical point of view, the AMSABS 4B is based on the MONORAIL BM roller guide up to a length of 6m. The distance measurement system's compact housing facilitates the construction of highly compact axes.
SCHNEEBERGER provides a fully digital interface with various cable lengths in order to connect it with the SSI, SSI+SinCos and FANUC control units.
Various options regarding lubrification and sealing of the measuring carriages mean that optimal adjustments can be made to the requirements of the application. The easily exchangeable reading head is identical and replaceable for all sizes.

Features of System MONORAIL AMSABS 4B

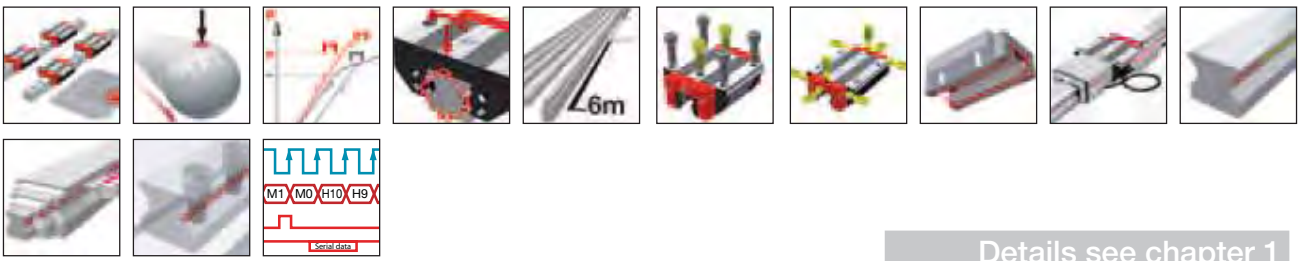

Details see chapter 1

10.1 Overview of types, sizes and available options

10.2 Technical data and options

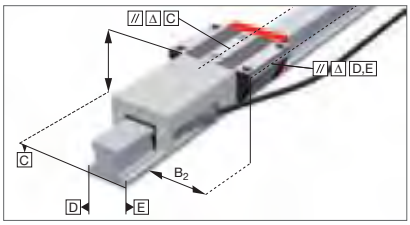

10.3 Accessories MONORAIL AMSABS 4B

10.4 Order key

Product overview AMSABS 4B Rails

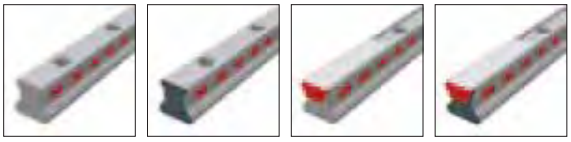

Buildsizes / Rail build forms	N standard	ND standard, through hardened	C for cover strip	CD for cover strip, through hardened
Size 15		AMSABS 4B S 15-ND		AMSABS 4B S 15-CD
Size 20	AMSABS 4B S 20-N		AMSABS 4B S 20-C	
Size 25	AMSABS 4B S 25-N		AMSABS 4B S 25-C	
Size 30	AMSABS 4B S 30-N		AMSABS 4B S 30-C	
Size 35	AMSABS 4B S 35-N		AMSABS 4B S 35-C	
Size 45	AMSABS 4B S 45-N		AMSABS 4B S 45-N	
Features				
Screwable from above	●	●	●	●
Small assembly effort			●	●
Great single-part system length	●		●	
For the support of metal covers		●		

Available options for AMSABS 4B Rails

Details see chapter 2

Accuracy

- G0 Highly accurate
- G1 Very accurate
- G2 Accurate
- G3 Standard

Straightness

- KC Standard

Coating

- CN None
- CH Hard chromium

Locating sides

- R11 Ref.bottom, scale bottom
- R12 Ref.bottom, scale top
- R21 Ref.top, scale bottom
- R22 Ref.top, scale top

Available accessories for AMSABS 4B Rails

Details see chapter 4.3

Plugs

Cover strips

Assembly tools

Product overview AMSABS 4B Carriages

Buildsizes / Carriage build forms	A standard,	B standard, long	C compact, high	D compact, high, long	F compact		
Size 15	AMSABS 4B W 15-A		AMSABS 4B W 15-C		AMSABS 4B W 15-F		
Size 20	AMSABS 4B W 20-A	AMSABS 4B W 20-B	AMSABS 4B W 20-C	AMSABS 4B W 20-D			
Size 25	AMSABS 4B W 25-A	AMSABS 4B W 25-B	AMSABS 4B W 25-C	AMSABS 4B W 25-D			
Size 30	AMSABS 4B W 30-A	AMSABS 4B W 30-B	AMSABS 4B W 30-C	AMSABS 4B W 30-D			
Size 35	AMSABS 4B W 35-A	AMSABS 4B W 35-B	AMSABS 4B W 35-C	AMSABS 4B W 35-D			
Size 45	AMSABS 4B W 45-A	AMSABS 4B W 45-B	AMSABS 4B W 45-C	AMSABS 4B W 45-D			
Features							
Screwable from above	●	●	●	●	●		
Screwable from below	●	●					
For high loads and moments		●		●			
For medium loads and moments	●		●		●		
For limited installation space					●		

Available options for AMSABS 4B Carriages

Details see chapter 2

Accuracy
- G0 Highly accurate
- G1 Very accurate
- G2 Accurate
- G3 Standard

Preload
- V0 Very low
- V1 Low
- V2 Medium
- V3 High

Reference side
- R1 Ref. at bottom
- R2 Ref. on top

Coating
- CN None
- CH Hard chromium

Lube connections
- S10 Left center
- S20 Right center
- S11 Top left
- S21 Top right
- S12 Lower left side
- S22 Lower right side
- S13 Upper left side
- S23 Upper right side
- S32 Left side
- S42 Right side

Lubrication
- LN Oil protect
- LG Grease protect
- LV Full greasing

Interface
- TMH TMH, absolute, 0.3m
- TSH TSH, absolute, 3m

Reading head position
- P1 Right top
- P3 Left bottom

Available accessories for AMSABS 4B Carriages

Details see chapter 2.1 und 4.3

Additional wipers
Front plates
Bellows
Lube nippels
Assembly rails
Lube adapters
Lubrication plates
Cables

AMSABS 4B S 15 Drawings

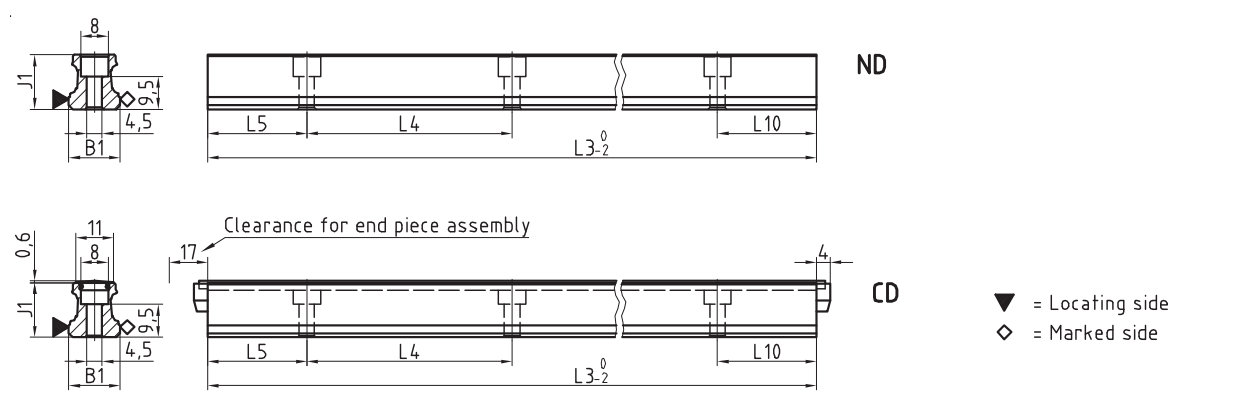

AMSABS 4B W 15 Drawings

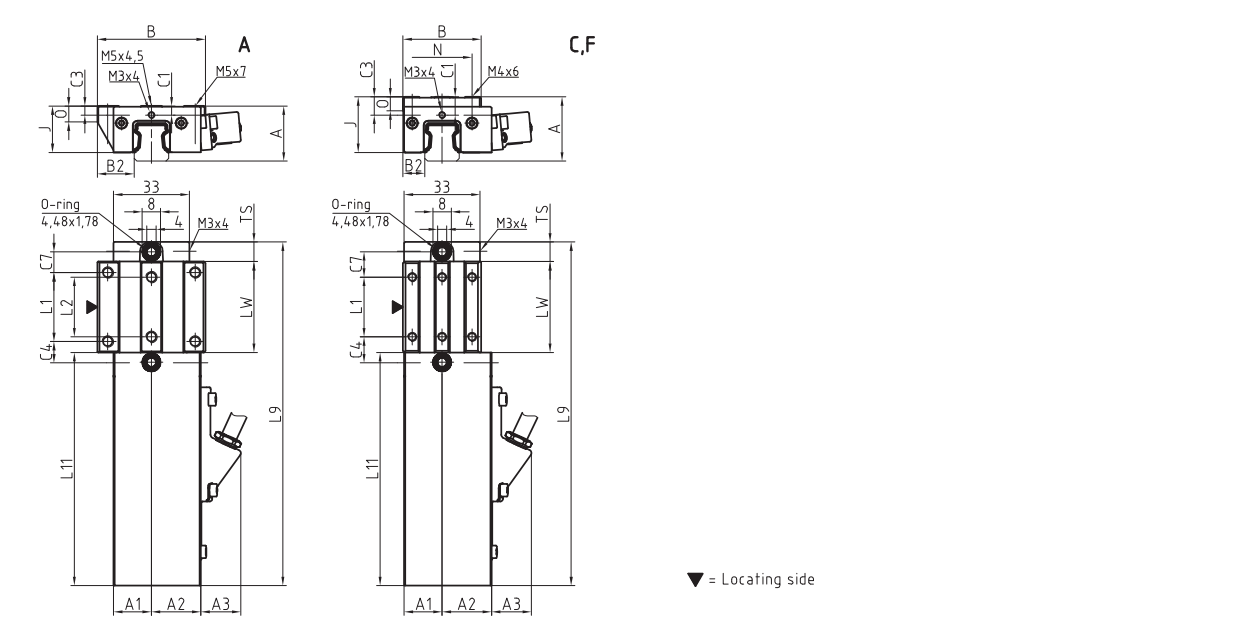

AMSABS 4B W 15 Rigidity diagram

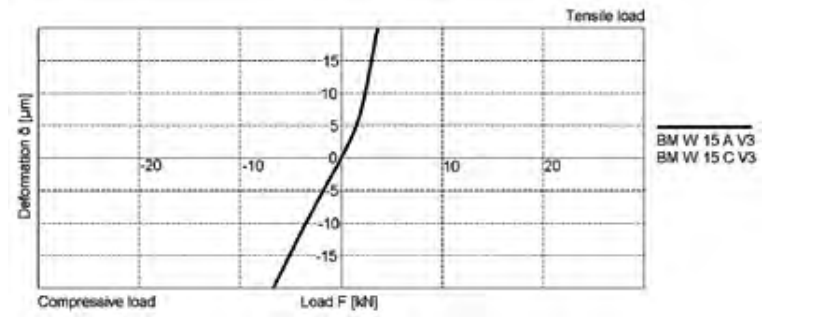

AMSABS 4B W 15 Load rating

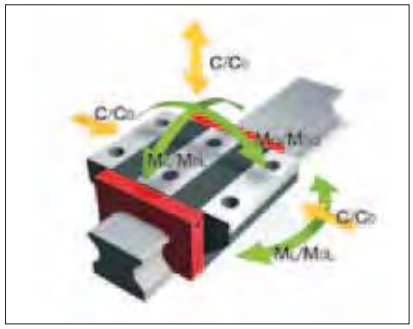

AMSABS 4B S 15 Dimensions


	AMSABS 4B S 15-ND	AMSABS 4B S 15-CD
B1: Rail width	15	15
J1: Rail height	15.7	15.7
L3: Rail length max.	1500	1500
L4: Spacing of fixing holes	60	60
L5/L10: Position of first/last fixing hole	28.5	28.5
Gew.: Rail weight, specific (kg/m)	1.4	1.3

Available options for AMSABS 4B S 15

AMSABS 4B W 15 Dimensions and capacities



	AMSABS 4B W 15-A	AMSABS 4B W 15-C	AMSABS 4B W 15-F
A: System height	24	28	24
A1: Half width of housing on opposite side	16.5	16.5	16.5
A2: Half width of housing on reading head side	21.5	21.5	21.5
A3: Projection of reading head	17.4	17.4	17.4
B: Carriage width	47	34	34
B2: Distance between locating faces	16	9.5	9.5
C1: Position of center front lube hole	4	8	4
C3: Position of lateral lube hole	4	8	4
C4: Position of lateral lube hole	9.3	11.3	11.3
C7: Position of top lube hole	9.05	11.05	11.05
J: Carriage height	20.2	24.2	20.2
L1: Exterior fixing hole spacing	30	26	26
L2: Interior fixing hole spacing	26	-	-
L9: Carriage length with housing	149.6	149.6	149.6
L11: Housing length	101.5	101.5	101.5
Lw: Inner carriage body length	39.6	39.6	39.6
N: Lateral fixing hole spacing	38	26	26
O: Reference face height	7	6	5.5
Ts: Front plate thickness	8.5	8.5	8.5
Capacities and weights			
C0: Static load capacitiy (N)	19600	19600	19600
C100: Dynamic load capacity (N)	9000	9000	9000
M0Q: Static cross moment capacity (Nm)	181	181	181
M0L: Static longitud. moment capacity (Nm)	146	146	146
MQ: Dyn. cross moment capacity (Nm)	83	83	83
ML: Dyn. longitud. moment capacity (Nm)	67	67	67
Gew: Carriage weight (kg)	0.4	0.5	0.4

Available options for AMSABS 4B W 15

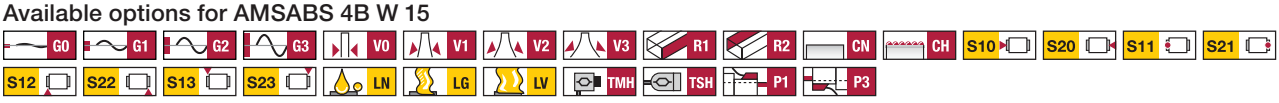

AMSABS 4B S 20 Drawings

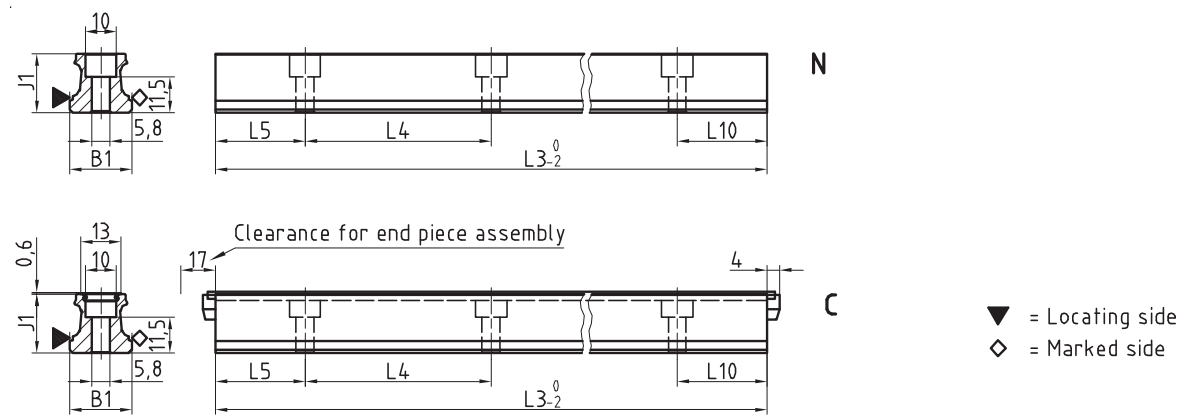

AMSABS 4B W 20 Drawings

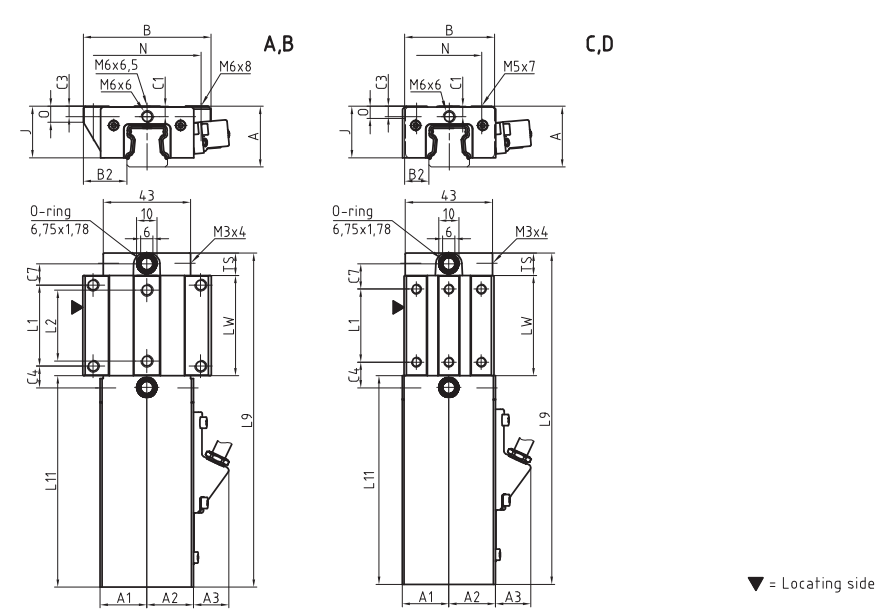

AMSABS 4B W 20 Rigidity diagram

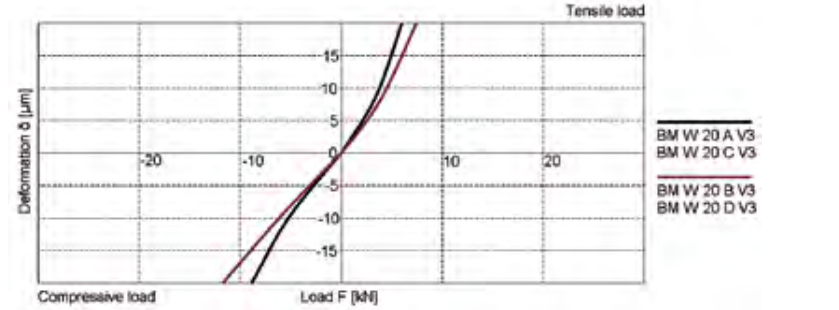

AMSABS 4B W 20 Load rating

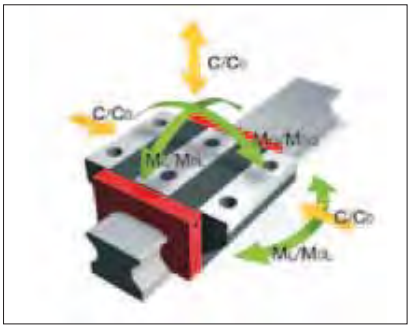

AMSABS 4B S 20 Dimensions


	AMSABS 4B S 20-N	AMSABS 4B S 20-C
B1: Rail width	20	20
J1: Rail height	19	19
L3: Rail length max.	3000	3000
L4: Spacing of fixing holes	60	60
L5/L10: Position of first/last fixing hole	28.5	28.5
Gew.: Rail weight, specific (kg/m)	2.2	2.1

Available options for AMSABS 4B S 20

AMSABS 4B W 20 Dimensions and capacities




	AMSABS 4B W 20-A	AMSABS 4B W 20-B	AMSABS 4B W 20-C	AMSABS 4B W 20-D
A: System height	30	30	30	30
A1: Half width of housing on opposite side	23	23	23	23
A2: Half width of housing on reading head side	23	23	23	23
A3: Projection of reading head	17.4	17.4	17.4	17.4
B: Carriage width	63	63	44	44
B2: Distance between locating faces	21.5	21.5	12	12
C1: Position of center front lube hole	5.2	5.2	5.2	5.2
C3: Position of lateral lube hole	5.2	5.2	5.2	5.2
C4: Position of lateral lube hole	10.75	18.75	12.75	13.75
C7: Position of top lube hole	10.25	18.25	12.25	13.25
J: Carriage height	25.5	25.5	25.5	25.5
L1: Exterior fixing hole spacing	40	40	36	50
L2: Interior fixing hole spacing	35	35	-	-
L9: Carriage length with housing	164.5	180.5	164.5	180.5
L11: Housing length	104	104	104	104
Lw: Inner carriage body length	49.5	65.5	49.5	65.5
N: Lateral fixing hole spacing	53	53	32	32
O: Reference face height	8	8	6	6
Ts: Front plate thickness	11	11	11	11
Capacities and weights				
C0: Static load capacitiy (N)	31400	41100	31400	41100
C100: Dynamic load capacity (N)	14400	17400	14400	17400
M0Q: Static cross moment capacity (Nm)	373	490	373	490
M0L: Static longitud. moment capacity (Nm)	292	495	292	495
MQ: Dyn. cross moment capacity (Nm)	171	206	171	206
ML: Dyn. longitud. moment capacity (Nm)	134	208	134	208
Gew: Carriage weight (kg)	0.7	0.8	0.6	0.7

Available options for AMSABS 4B W 20

AMSABS 4B S 25 Drawings

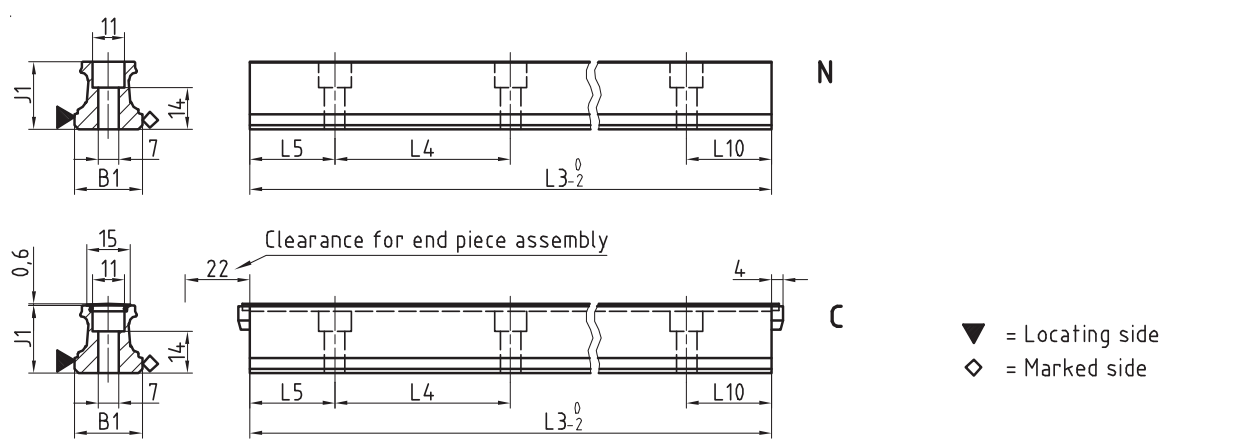

AMSABS 4B W 25 Drawings

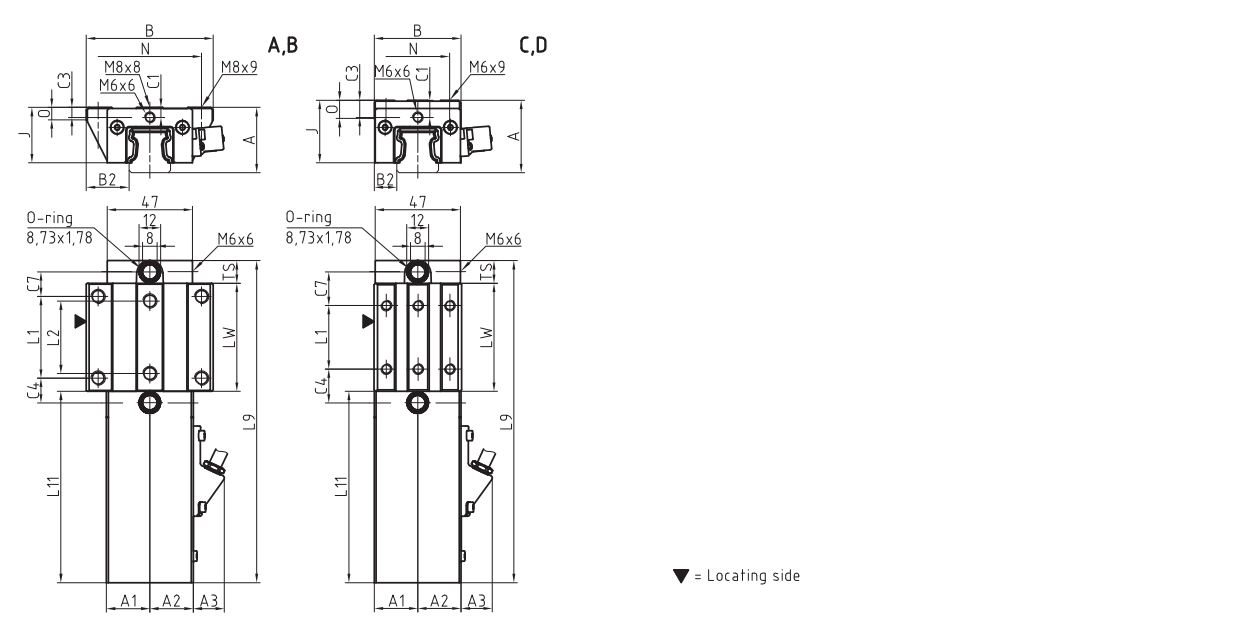

AMSABS 4B W 25 Rigidity diagram

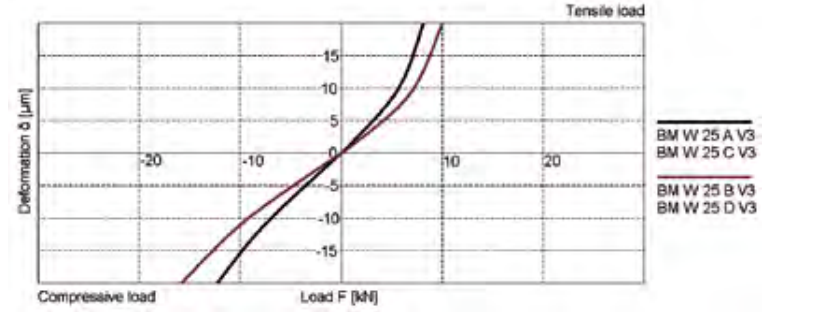

AMSABS 4B W 25 Load rating

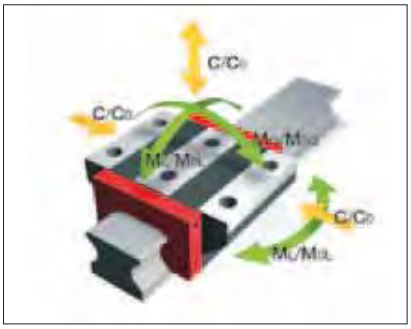

AMSABS 4B S 25 Dimensions


	AMSABS 4B S 25-N	AMSABS 4B S 25-C
B1: Rail width	23	23
J1: Rail height	22.7	22.7
L3: Rail length max.	6000	6000
L4: Spacing of fixing holes	60	60
L5/L10: Position of first/last fixing hole	28.5	28.5
Gew.: Rail weight, specific (kg/m)	3.0	2.8

Available options for AMSABS 4B S 25

AMSABS 4B W 25 Dimensions and capacities




	AMSABS 4B W 25-A	AMSABS 4B W 25-B	AMSABS 4B W 25-C	AMSABS 4B W 25-D
A: System height	36	36	40	40
A1: Half width of housing on opposite side	23.9	23.9	23.9	23.9
A2: Half width of housing on reading head side	23.9	23.9	23.9	23.9
A3: Projection of reading head	17.2	17.2	17.2	17.2
B: Carriage width	70	70	48	48
B2: Distance between locating faces	23.5	23.5	12.5	12.5
C1: Position of center front lube hole	5.5	5.5	9.5	9.5
C3: Position of lateral lube hole	5.5	5.5	9.5	9.5
C4: Position of lateral lube hole	13.75	23.25	18.75	20.75
C7: Position of top lube hole	13.5	23	18.5	20.5
J: Carriage height	30.5	30.5	34.5	34.5
L1: Exterior fixing hole spacing	45	45	35	50
L2: Interior fixing hole spacing	40	40	-	-
L9: Carriage length with housing	177.5	196.5	177.5	196.5
L11: Housing length	105.5	105.5	105.5	105.5
Lw: Inner carriage body length	59.5	78.5	59.5	78.5
N: Lateral fixing hole spacing	57	57	35	35
O: Reference face height	7	7	11	11
Ts: Front plate thickness	12.5	12.5	12.5	12.5
Capacities and weights				
C0: Static load capacitiy (N)	46100	60300	46100	60300
C100: Dynamic load capacity (N)	21100	25500	21100	25500
M0Q: Static cross moment capacity (Nm)	631	825	631	825
M0L: Static longitud. moment capacity (Nm)	513	863	513	863
MQ: Dyn. cross moment capacity (Nm)	289	349	289	349
ML: Dyn. longitud. moment capacity (Nm)	235	365	235	365
Gew: Carriage weight (kg)	1.0	1.2	0.9	1.1

Available options for AMSABS 4B W 25

AMSABS 4B S 30 Drawings

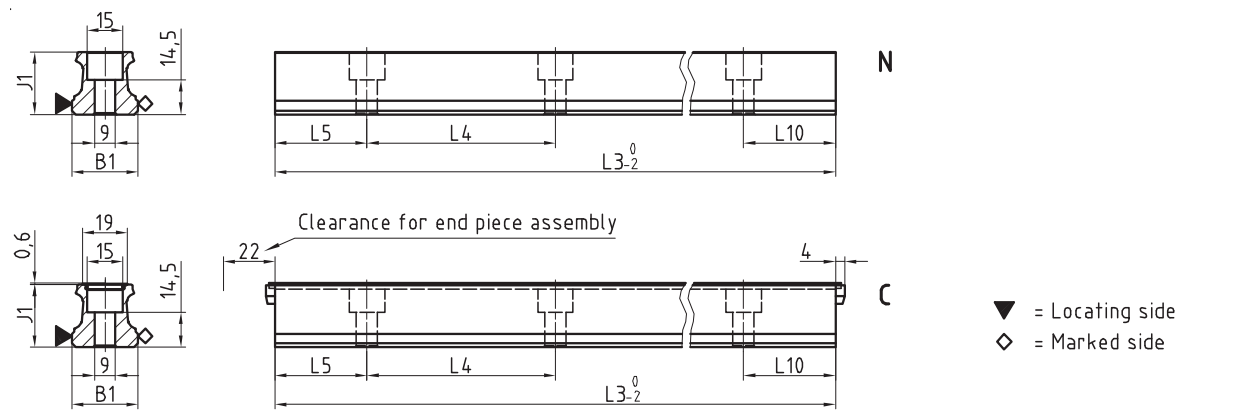

AMSABS 4B W 30 Drawings

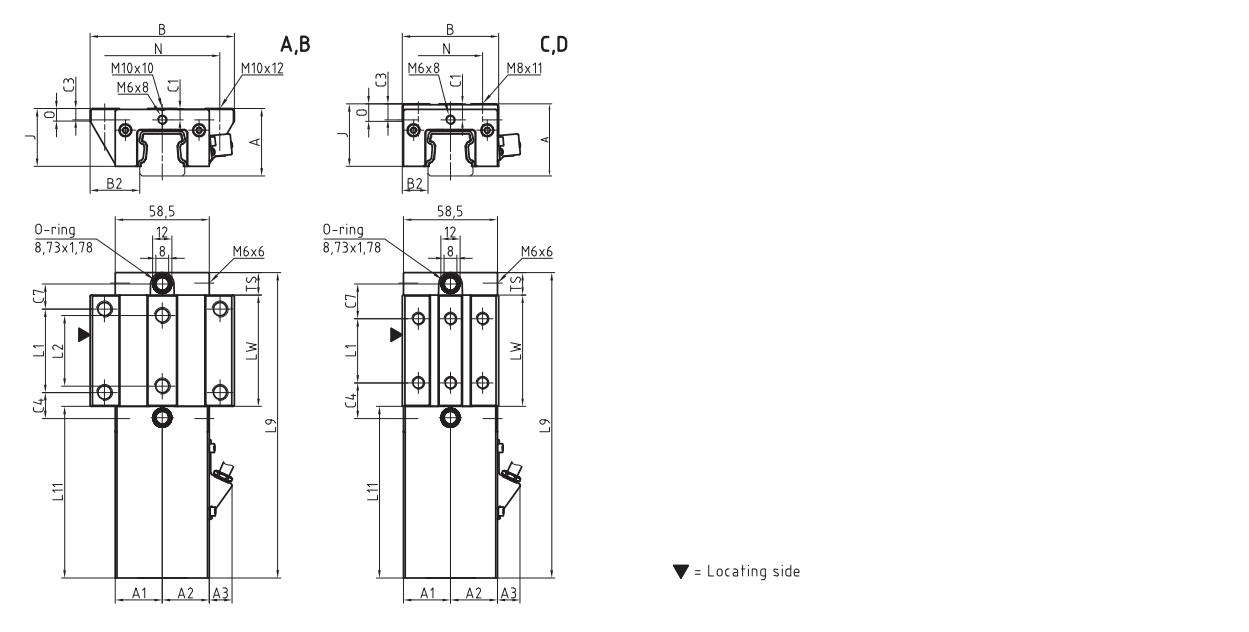

AMSABS 4B W 30 Rigidity diagram

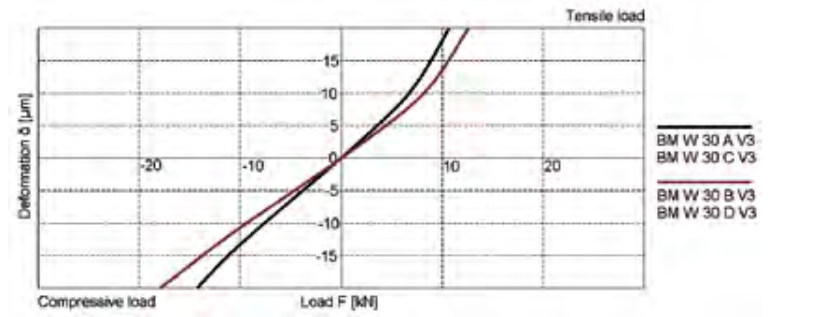

AMSABS 4B W 30 Load rating

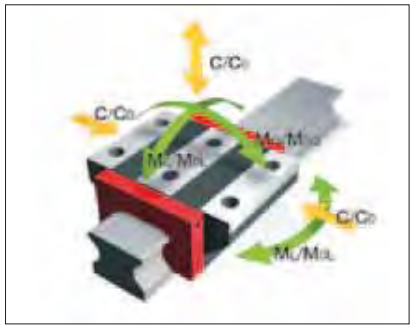

AMSABS 4B S 30 Dimensions


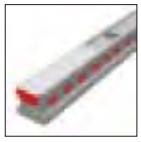

	AMSABS 4B S 30-N	AMSABS 4B S 30-C					
B1: Rail width	28	28					
J1: Rail height	26	26					
L3: Rail length max.	6000	6000					
L4: Spacing of fixing holes	80	80					
L5/L10: Position of first/last fixing hole	38.5	38.5					
Gew.: Rail weight, specific (kg/m)	4.3	4.1					

Available options for AMSABS 4B S 30

AMSABS 4B W 30 Dimensions and capacities




	AMSABS 4B W 30-A	AMSABS 4B W 30-B	AMSABS 4B W 30-C	AMSABS 4B W 30-D			
A: System height	42	42	45	45			
A1: Half width of housing on opposite side	29.3	29.3	29.3	29.3			
A2: Half width of housing on reading head side	29.3	29.3	29.3	29.3			
A3: Projection of reading head	14.2	14.2	14.2	14.2			
B: Carriage width	90	90	60	60			
B2: Distance between locating faces	31	31	16	16			
C1: Position of center front lube hole	7	7	10	10			
C3: Position of lateral lube hole	7	7	10	10			
C4: Position of lateral lube hole	16.2	27.2	22.2	23.2			
C7: Position of top lube hole	15.7	26.7	21.7	22.7			
J: Carriage height	35.9	35.9	38.9	38.9			
L1: Exterior fixing hole spacing	52	52	40	60			
L2: Interior fixing hole spacing	44	44	-	-			
L9: Carriage length with housing	190.4	212.4	190.4	212.4			
L11: Housing length	107	107	107	107			
Lw: Inner carriage body length	69.4	91.4	69.4	91.4			
N: Lateral fixing hole spacing	72	72	40	40			
O: Reference face height	7.8	7.8	11	11			
Ts: Front plate thickness	14	14	14	14			
Capacities and weights							
C0: Static load capacitiy (N)	63700	83300	63700	83300			
C100: Dynamic load capacity (N)	29200	35300	29200	35300			
M0Q: Static cross moment capacity (Nm)	1084	1414	1084	1414			
M0L: Static longitud. moment capacity (Nm)	829	1390	829	1390			
MQ: Dyn. cross moment capacity (Nm)	497	599	497	599			
ML: Dyn. longitud. moment capacity (Nm)	380	589	380	589			
Gew: Carriage weight (kg)	1.6	1.9	1.4	1.7			

Available options for AMSABS 4B W 30

AMSABS 4B S 35 Drawings

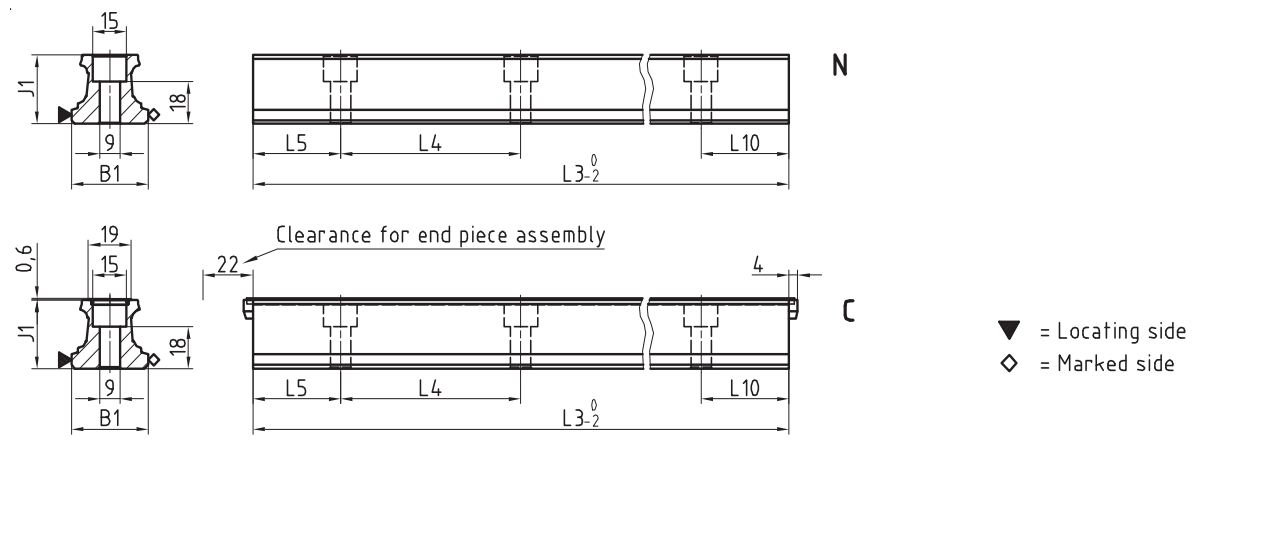

AMSABS 4B W 35 Drawings

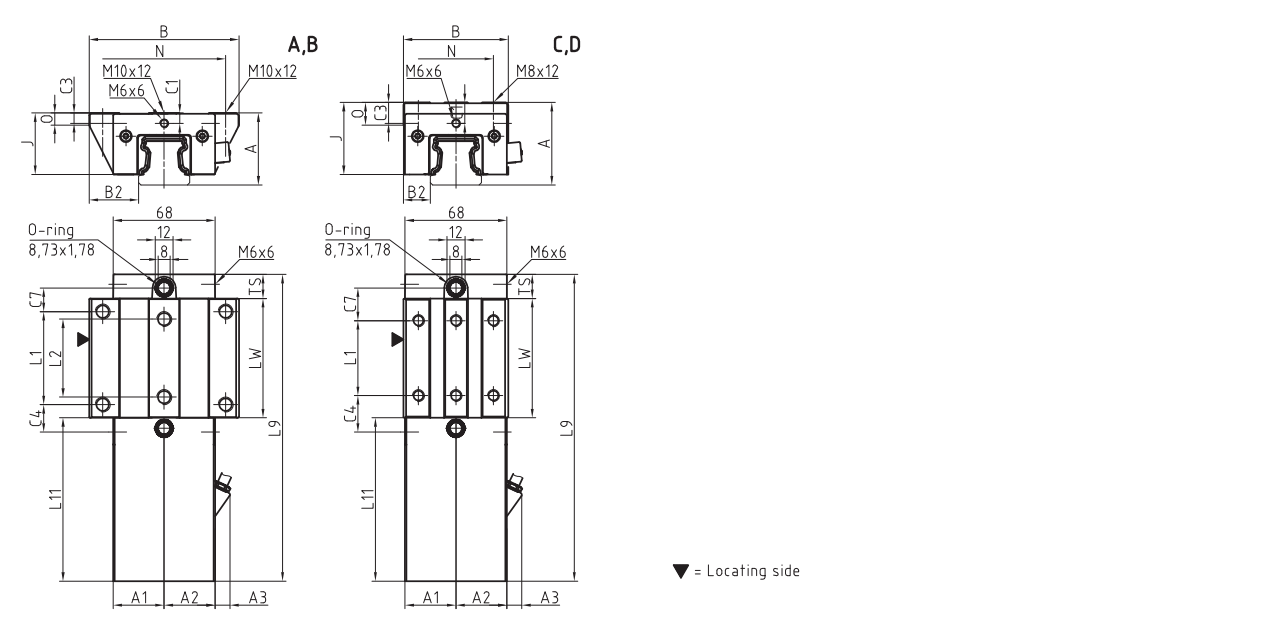

AMSABS 4B W 35 Rigidity diagram

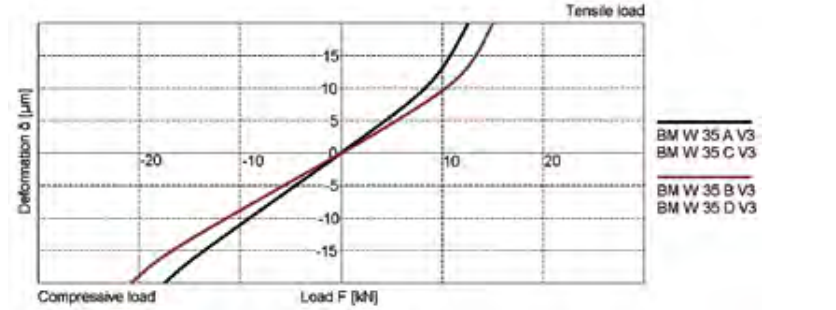

AMSABS 4B W 35 Load rating

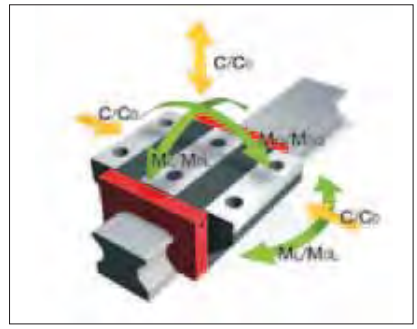

AMSABS 4B S 35 Dimensions


	AMSABS 4B S 35-N	AMSABS 4B S 35-C					
B1: Rail width	34	34					
J1: Rail height	29.5	29.5					
L3: Rail length max.	6000	6000					
L4: Spacing of fixing holes	80	80					
L5/L10: Position of first/last fixing hole	38.5	38.5					
Gew.: Rail weight, specific (kg/m)	5.4	5.2					

Available options for AMSABS 4B S 35

AMSABS 4B W 35 Dimensions and capacities




	AMSABS 4B W 35-A	AMSABS 4B W 35-B	AMSABS 4B W 35-C	AMSABS 4B W 35-D			
A: System height	48	48	55	55			
A1: Half width of housing on opposite side	34	34	34	34			
A2: Half width of housing on reading head side	34	34	34	34			
A3: Projection of reading head	9.9	9.9	9.9	9.9			
B: Carriage width	100	100	70	70			
B2: Distance between locating faces	33	33	18	18			
C1: Position of center front lube hole	7	7	14	14			
C3: Position of lateral lube hole	7	7	14	14			
C4: Position of lateral lube hole	18.3	31.05	24.3	26.05			
C7: Position of top lube hole	15.8	28.55	21.8	23.55			
J: Carriage height	41	41	48	48			
L1: Exterior fixing hole spacing	62	62	50	72			
L2: Interior fixing hole spacing	52	52	-	-			
L9: Carriage length with housing	204.6	230.1	204.6	230.1			
L11: Housing length	109	109	109	109			
Lw: Inner carriage body length	79.6	105.1	79.6	105.1			
N: Lateral fixing hole spacing	82	82	50	50			
O: Reference face height	8	8	15	15			
Ts: Front plate thickness	16	16	16	16			
Capacities and weights							
C0: Static load capacitiy (N)	84400	110300	84400	110300			
C100: Dynamic load capacity (N)	38700	46700	38700	46700			
M0Q: Static cross moment capacity (Nm)	1566	2048	1566	2048			
M0L: Static longitud. moment capacity (Nm)	1252	2104	1252	2104			
MQ: Dyn. cross moment capacity (Nm)	718	867	718	867			
ML: Dyn. longitud. moment capacity (Nm)	574	891	574	891			
Gew: Carriage weight (kg)	2.3	2.8	2.2	2.7			

Available options for AMSABS 4B W 35

AMSABS 4B S 45 Drawings

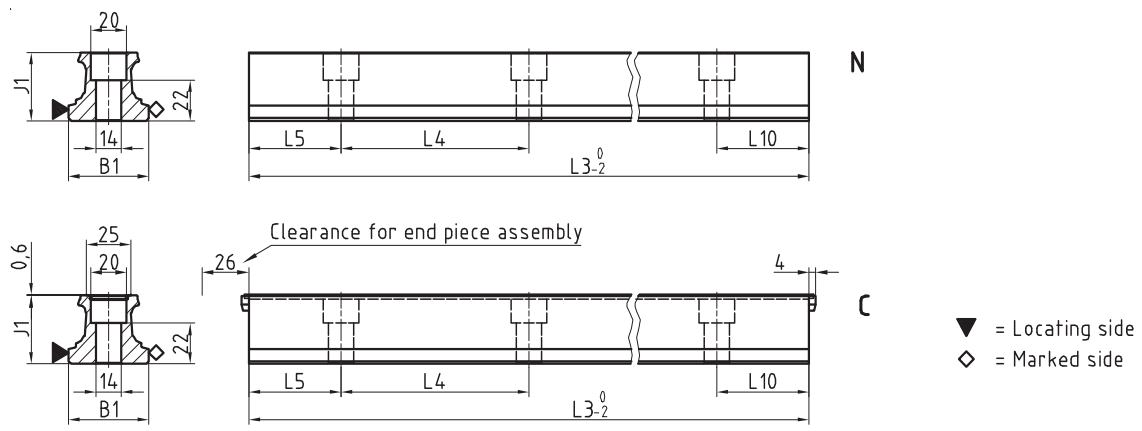

AMSABS 4B W 45 Drawings

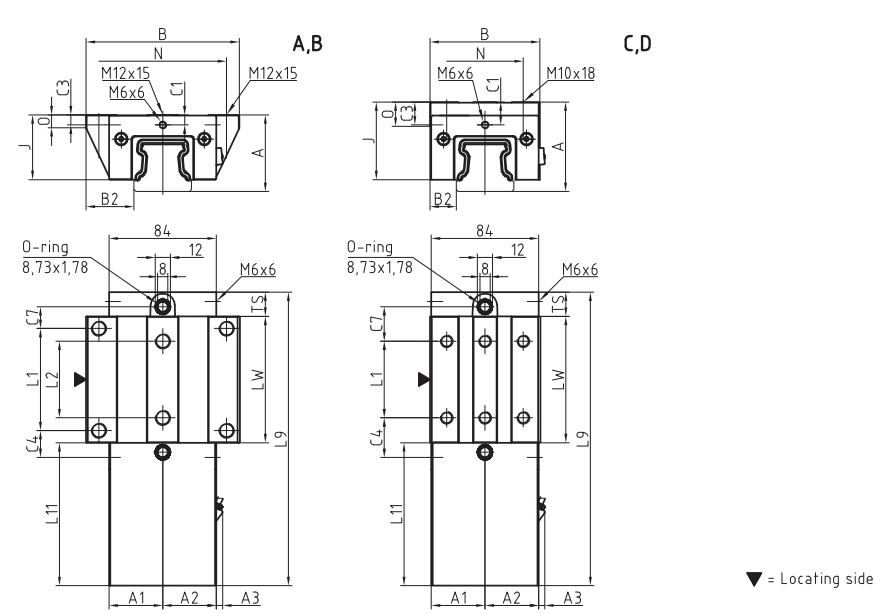

AMSABS 4B W 45 Rigidity diagram

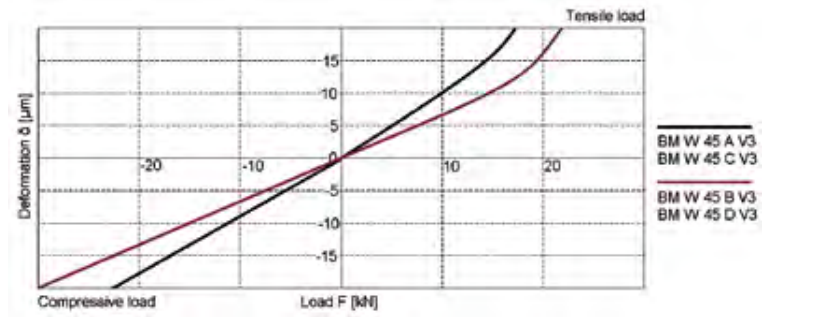

AMSABS 4B W 45 Load rating

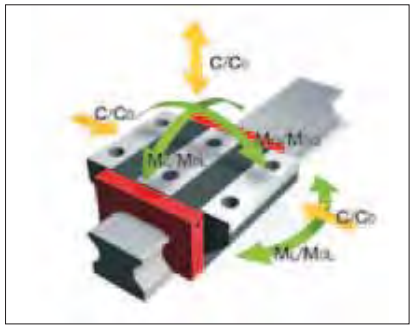

AMSABS 4B S 45 Dimensions


	AMSABS 4B S 45-N	AMSABS 4B S 45-C
B1: Rail width	45	45
J1: Rail height	37	37
L3: Rail length max.	6 000	6 000
L4: Spacing of fixing holes	105	105
L5/L10: Position of first/last fixing hole	51	51
Gew.: Rail weight, specific (kg/m)	8.8	8.6

Available options for AMSABS 4B S 45

AMSABS 4B W 45 Dimensions and capacities




	AMSABS 4B W 45-A	AMSABS 4B W 45-B	AMSABS 4B W 45-C	AMSABS 4B W 45-D
A: System height	60	60	70	70
A1: Half width of housing on opposite side	42	42	42	42
A2: Half width of housing on reading head side	42	42	42	42
A3: Projection of reading head	4.8	4.8	4.8	4.8
B: Carriage width	120	120	86	86
B2: Distance between locating faces	37.5	37.5	20.5	20.5
C1: Position of center front lube hole	8	8	18	18
C3: Position of lateral lube hole	8	8	18	18
C4: Position of lateral lube hole	21.05	36.8	31.05	36.8
C7: Position of top lube hole	17.05	32.8	27.05	32.8
J: Carriage height	50.8	50.8	60.8	60.8
L1: Exterior fixing hole spacing	80	80	60	80
L2: Interior fixing hole spacing	60	60	-	-
L9: Carriage length with housing	230.1	261.6	230.1	261.6
L11: Housing length	112	112	112	112
Lw: Inner carriage body length	99.1	130.6	99.1	130.6
N: Lateral fixing hole spacing	100	100	60	60
O: Reference face height	10	10	19	19
Ts: Front plate thickness	19	19	19	19
Capacities and weights				
C0: Static load capacitiy (N)	134800	176300	134800	176300
C100: Dynamic load capacity (N)	61900	74700	61900	74700
M0Q: Static cross moment capacity (Nm)	3193	4175	3193	4175
M0L: Static longitud. moment capacity (Nm)	2498	4199	2498	4199
MQ: Dyn. cross moment capacity (Nm)	1466	1769	1466	1769
ML: Dyn. longitud. moment capacity (Nm)	1147	1779	1147	1779
Gew: Carriage weight (kg)	4.0	4.9	4.0	5.0

Available options for AMSABS 4B W 45

AMSABS 4B Rails accessories overview

Accessories	AMSABS 4B S 15	AMSABS 4B S 20	AMSABS 4B S 25	AMSABS 4B S 30	AMSABS 4B S 35	AMSABS 4B S 45
Plugs:						
Plastic plugs	BRK 15	BRK 20	BRK 25	BRK 30	BRK 35	BRK 45
Cover strips:						
Cover strip (spare part)	BAC 15	BAC 20	BAC 25	BAC 30	BAC 35	BAC 45
End piece for cover strip (spare part)	EST 15-BAC	EST 20-BAC	EST 25-BAC	EST 30-BAC	EST 35-BAC	EST 45-BAC
Securing band for cover strip (spare part)	BSC 15-BAC	BSC 20-BAC	BSC 25-BAC	BSC 30-BAC	BSC 35-BAC	BSC 45-BAC
Assembly tools:						
Installation tool for cover strip	BWC 15	BWC 20	BWC 25	BWC 30	BWC 35	BWC 45

AMSABS 4B Carriages accessories overview

Accessories	AMSABS 4B W 15	AMSABS 4B W 20	AMSABS 4B W 25	AMSABS 4B W 30	AMSABS 4B W 35	AMSABS 4B W 45
Additional wipers:						
Additional wipers NBR	ZBN 15	ZBN 20	ZBN 25	ZBN 30	ZBN 35	ZBN 45
Additional wipers Viton	ZBV 15	ZBV 20	ZBV 25	ZBV 30	ZBV 35	ZBV 45
Metal wiper	ABM 15-A	ABM 20-A	ABM 25-A	ABM 30-A	ABM 35-A	ABM 45-A
Bellows:						
Bellows	-	FBB 20	FBB 25	FBB 30	FBB 35	FBB 45
Adapter plate for bellows (spare part)	-	ZPB 20	ZPB 25	ZPB 30	ZPB 35	ZPB 45
End plate for bellows (spare part)	-	EPB 20	EPB 25	EPB 30	EPB 35	EPB 45
Assembly rails:						
Assembly rail	MBM 15	MBM 20	MBM 25	MBM 30	MBM 35	MBM 45
Lubrication plates:						
Lubrication plate	SPL 15-BM	SPL 20-BM	SPL 25-BM	SPL 30-BM	SPL 35-BM	SPL 45-BM
Front plates:						
Cross wiper for front plate (spare part)	QAS 15-STB	QAS 20-STB	QAS 25-STB	QAS 30-STB	QAS 35-STB	QAS 45-STB
Lube nippels:						
Hydraulic-type grease nipple straight	-	SN 6	SN 6	SN 6	SN 6	SN 6
Hydraulic-type grease nipple 45°	-	SN 6-45	SN 6-45	SN 6-45	SN 6-45	SN 6-45
Hydraulic-type grease nipple 90°	-	SN 6-90	SN 6-90	SN 6-90	SN 6-90	SN 6-90
Flush type grease nipple M3	SN 3-T	SN 3-T	-	-	-	-
Flush type grease nipple M6	-	SN 6-T	SN 6-T	SN 6-T	SN 6-T	SN 6-T
Grease gun for SN 3-T und SN 6-T	SFP-T3	SFP-T3	SFP-T3	SFP-T3	SFP-T3	SFP-T3
Lube adapters:						
Straight screw-in connection M3	SA 3-D3	SA 3-D3	-	-	-	-
Lubrication adapter M8 round-head	-	SA 6-RD-M8	SA 6-RD-M8	SA 6-RD-M8	SA 6-RD-M8	SA 6-RD-M8
Lubrication adapter M8 hexagon head	-	-	-	SA 6-6KT-M8	SA 6-6KT-M8	SA 6-6KT-M8
Lubrication adapter G1/8 hexagon head	-	-	-	SA 6-6KT-G1/8	SA 6-6KT-G1/8	SA 6-6KT-G1/8
Swivel screw connection for pipe d=4 mm	-	SV 6-D4	SV 6-D4	SV 6-D4	SV 6-D4	SV 6-D4
Swivel screw connection M6	-	SV 6-M6	SV 6-M6	SV 6-M6	SV 6-M6	SV 6-M6
Swivel screw connection M6 long	-	SV 6-M6-L	SV 6-M6-L	SV 6-M6-L	SV 6-M6-L	SV 6-M6-L
Swivel screw connection M8	-	SV 6-M8	SV 6-M8	SV 6-M8	SV 6-M8	SV 6-M8
Swivel screw connection M8 long	-	SV 6-M8-L	SV 6-M8-L	SV 6-M8-L	SV 6-M8-L	SV 6-M8-L

10.4 Order key

Individual guide rails and carriages are ordered in accordance with the order codes described below.
AMSABS 4B carriages consist of guide carriage, casing and reading head.
All MONORAIL BM carriages can also be used with AMSABS 4B rails.
Q.v. chapter 2 and chapter 4.3 for the order key for accessories.
Separate order codes are used in each case for rails, carriages and accessories. This also applies to different versions of rails and carriages.
All guide components are supplied individually as standard, i.e. unassembled.
If required, SCHNEEBERGER can also supply rails and carriages assembled incl. accessories as complete systems. Please note the ordering instructions in chapter 2.4 if this applies.

Order code for AMSABS 4B Rails

	1x	AMSABS 4B S	25	-N	-G2	-KC	-R12	-958	-28	-28	-CN
Quantity											
Rail											
Size											
Type											
Accuracy											
Straightness											
Reference side											
Rail length L3											
Position of first fixing hole L5											
Position of last fixing hole L10											
Coating											

NB

Q.v. chapter 10.1 to 10.3 for an overview of types, details of shapes, available options and accessories.
Q.v. chapter 2 for a description of the options.
If possible, standard lengths are preferred for L3 rail length.
These are calculated with the table values in chapter 10.2 using the following formula: $L3 = n \times L4 + L5 + L10 \leqslant L3max$.

Order code for AMSABS 4B Carriages

	1x	AMSABS 4B W	25	-A	-P1	-G2	-V1	-R1	-CN	-S10	-LN	-TMH
Quantity												
Carriage												
Size												
Type												
Reading head position												
Accuracy												
Preload												
Reference side												
Coating												
Lube connection												
Lubrication as delivered condition												
Interface												

NB

Q.v. chapter 10.1 to 10.3 for an overview of types, details of shapes, available options and accessories.
Q.v. chapter 2 for a description of the options.
For detailed information about current configuration options for the interfaces, please visit our website at www.schneeberger.com

SCHNEEBERGER
LINEAR TECHNOLOGY

11.0 MONORAIL AMSA 3L

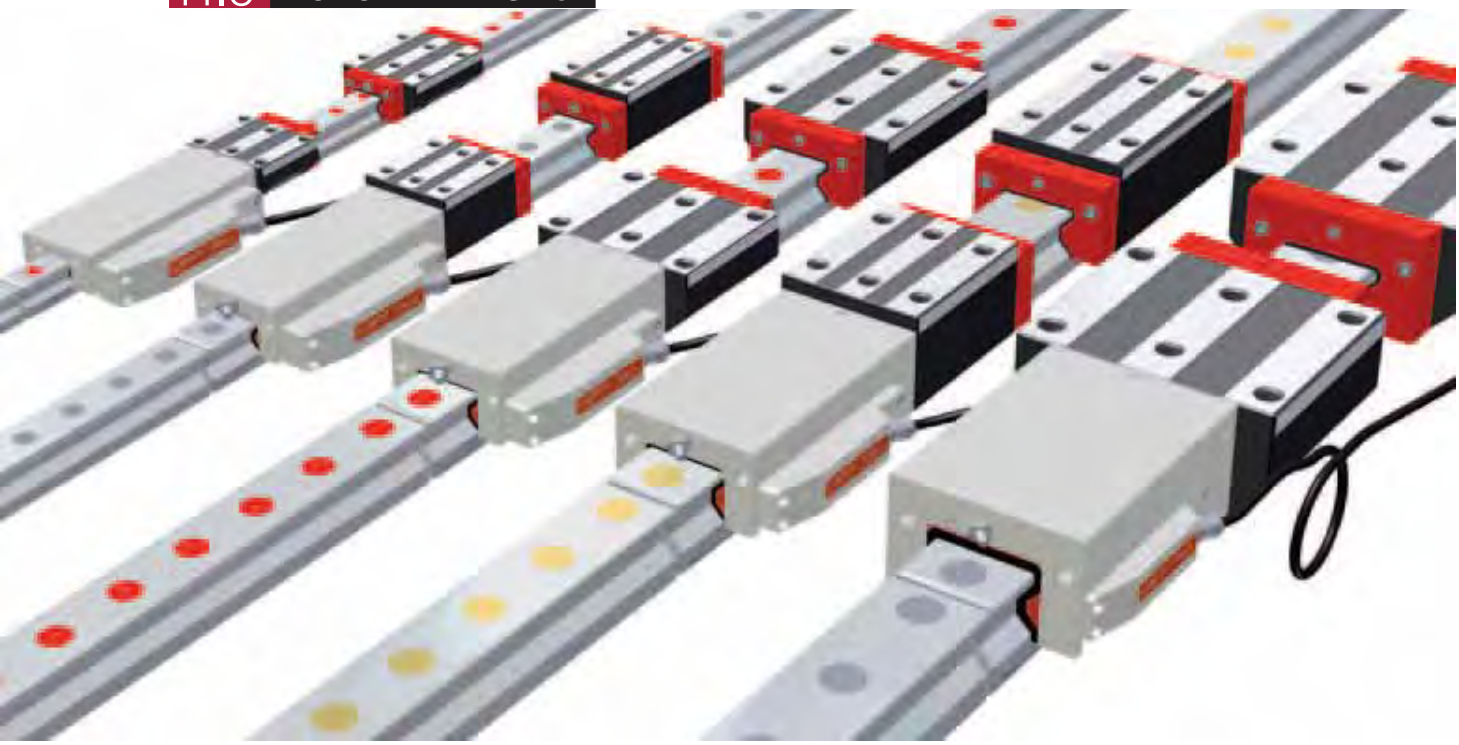

With the MONORAIL AMSA 3L, SCHNEEBERGER provides an integrated distance measuring system for the construction of particularly long axes with specific requirements regarding the accuracy of the system. From a mechanical point of view, the AMSA 3L is based on the SCHNEEBERGER MONORAIL MR roller guide. The special design of the rail joints combined with the AMSA 3L reading head means that the joints can be traversed and any long measuring axes can be constructed.
The analogue interface 1Vss (200µm signal period) with various cable lengths is available as a control interface.
Various options regarding lubrification and sealing of the measuring carriages mean that optimal adjustments can be made to the requirements of the application. The easily exchangeable reading head is identical and replaceable for all sizes.

Features of System MONORAIL AMSA 3L

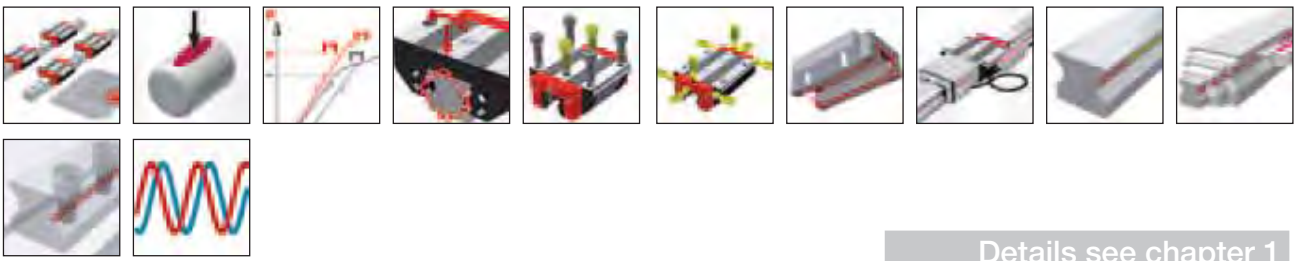

Details see chapter 1

11.1 Overview of types, sizes and available options

11.2 Technical data and options

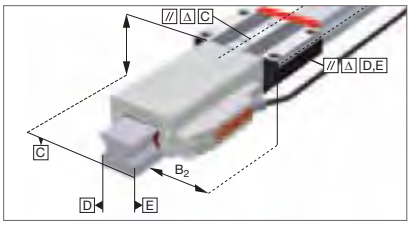

11.3 Accessories MONORAIL AMSA 3L

11.4 Order key

Product overview AMSA 3L Rails

Buildsizes / Rail build forms	N standard					
Size 25	AMSA 3L S 25-N					
Size 35	AMSA 3L S 35-N					
Size 45	AMSA 3L S 45-N					
Size 55	AMSA 3L S 55-N					
Size 65	AMSA 3L S 65-N					
Features						
Screwable from above	●					
Large system lengths	●					

Available options for AMSA 3L Rails

Details see chapter 2

Accuracy

- G1 Very accurate

Straightness

- KC Standard

Coating

- CN None
- CH Hard chromium

Locating sides

- R11 Ref.bottom, scale bottom
- R22 Ref.top, scale top

Available accessories for AMSA 3L Rails

Details see chapter 3.3

Plugs

Assembly tools

Product overview AMSA 3L Carriages

Buildsizes / Carriage build forms	A standard,	B standard, long	C compact, high	D compact, high, long			
Size 25	AMSA 3L W 25-A	AMSA 3L W 25-B	AMSA 3L W 25-C	AMSA 3L W 25-D			
Size 35	AMSA 3L W 35-A	AMSA 3L W 35-B	AMSA 3L W 35-C	AMSA 3L W 35-D			
Size 45	AMSA 3L W 45-A	AMSA 3L W 45-B	AMSA 3L W 45-C	AMSA 3L W 45-D			
Size 55	AMSA 3L W 55-A	AMSA 3L W 55-B	AMSA 3L W 55-C	AMSA 3L W 55-D			
Size 65	AMSA 3L W 65-A	AMSA 3L W 65-B	AMSA 3L W 65-C	AMSA 3L W 65-D			
Features							
Screwable from above	●	●	●	●			
Screwable from below	●	●					
For high loads and moments		●		●			
For medium loads and moments	●		●				

Available options for AMSA 3L Carriages

Details see chapter 2

Accuracy

- G0 Highly accurate
- G1 Very accurate
- G2 Accurate
- G3 Standard

Preload

- V1 Low
- V2 Medium
- V3 High

Reference side

- R1 Ref. at bottom
- R2 Ref. on top

Coating

- CN None
- CH Hard chromium

Lube connections

- S10 Left center
- S20 Right center
- S11 Top left
- S21 Top right
- S12 Lower left side
- S22 Lower right side
- S13 Upper left side
- S23 Upper right side
- S32 Left side
- S42 Right side

Lubrication

- LN Oil protect
- LG Grease protect
- LV Full greasing

Interface

- TMU TMU, analog, 0.3m
- TSU TSU, analog, 3m

Reading head position

- P1 Right top
- P3 Left bottom

Available accessories for AMSA 3L Carriages

Details see chapter 2.1 and 3.3

Additional wipers
Lube nippels
Assembly rails
Lube adapters
Lubrication plates
Front plates

AMSA 3L S 25 Drawings

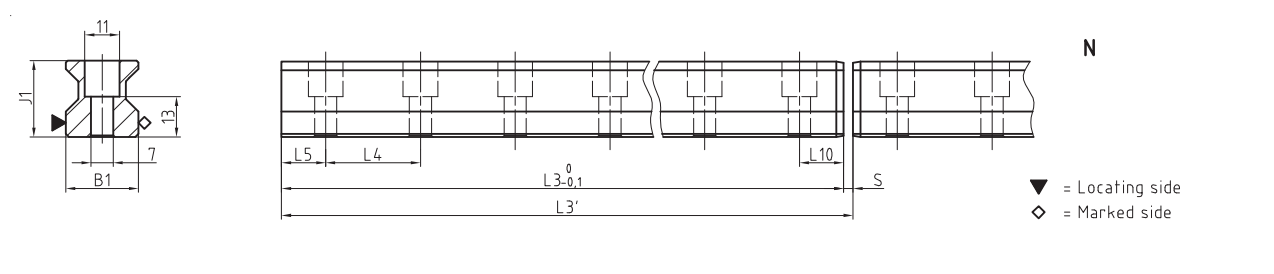

AMSA 3L W 25 Drawings

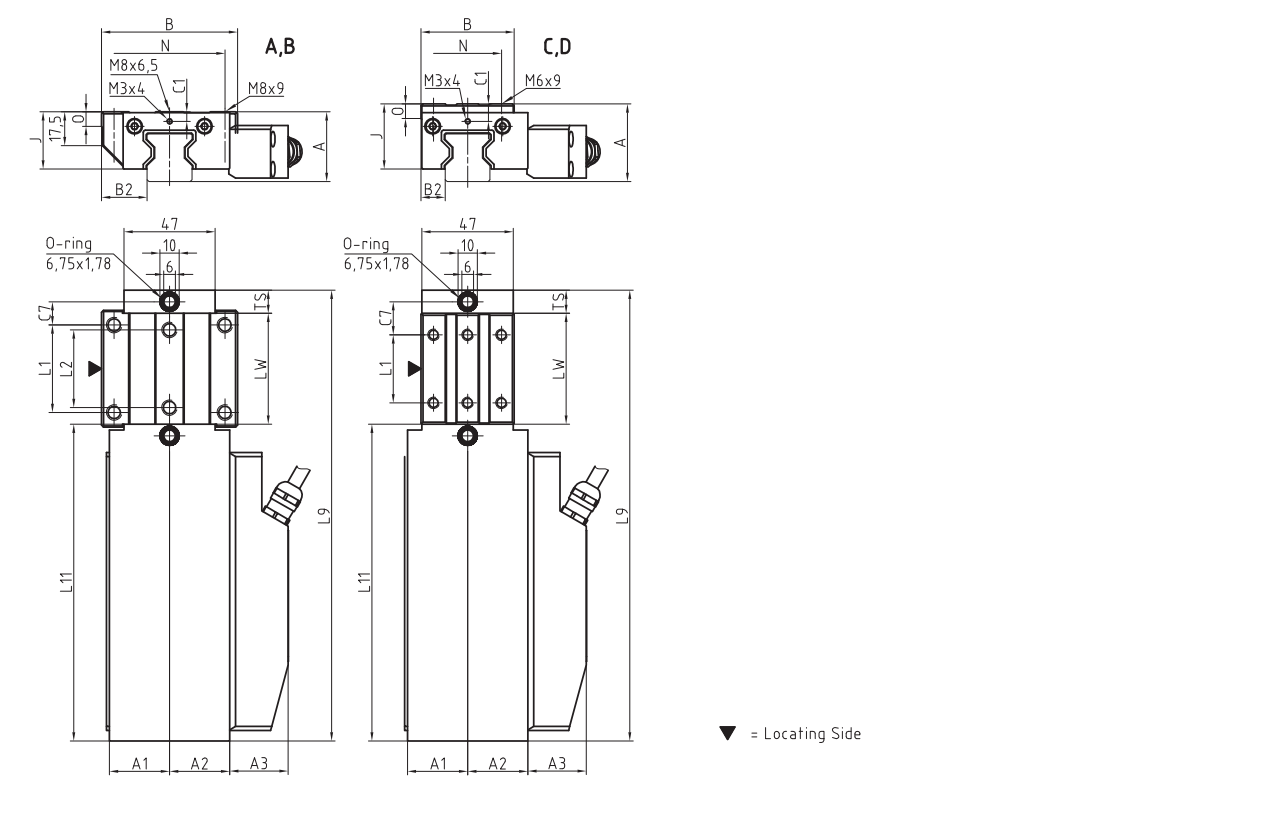

AMSA 3L W 25 Rigidity diagram

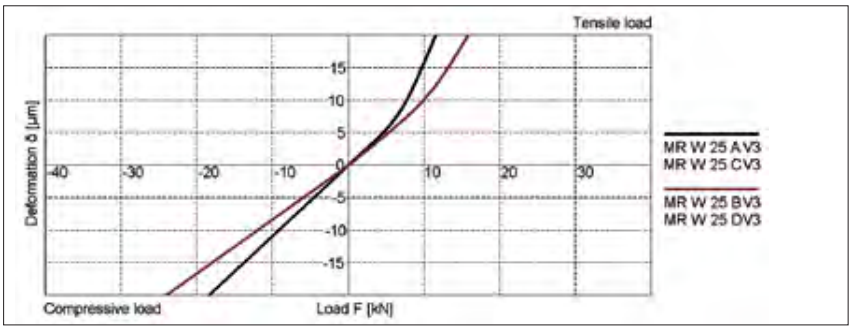

AMSA 3L W 25 Load rating

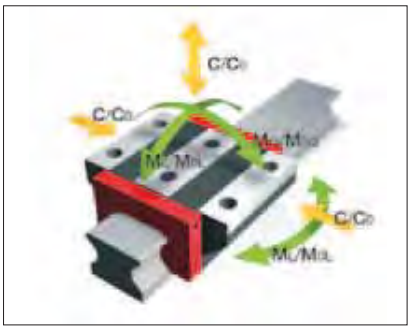

AMSA 3L S 25 Dimensions

	AMSA 3L S 25-N
B1: Rail width	23
J1: Rail height	24.45
L3: Rail length	2 999.5
L3': System length	3 000
S: Gap size	0.5
L4: Spacing of fixing holes	30
L5/L10: Position of first/last fixing hole	14.75
Gew.: Rail weight, specific (kg/m)	3.4

Available options for AMSA 3L S 25

AMSA 3L W 25 Dimensions and capacities




	AMSA 3L W 25-A	AMSA 3L W 25-B	AMSA 3L W 25-C	AMSA 3L W 25-D
A: System height	36	36	40	40
A1: Half width of housing on opposite side	31	31	31	31
A2: Half width of housing on reading head side	31	31	31	31
A3: Projection of reading head	30	30	30	30
B: Carriage width	70	70	48	48
B2: Distance between locating faces	23.5	23.5	12.5	12.5
C1: Position of center front lube hole*	5 / 5.5	5 / 5.5	9 / 9.5	9 / 9.5
C3: Position of lateral lube hole	-	-	-	-
C4: Position of lateral lube hole	-	-	-	-
C7: Position of top lube hole	12	23.2	17	20.7
J: Carriage height	29.5	29.5	33.5	33.5
L1: Exterior fixing hole spacing	45	45	35	50
L2: Interior fixing hole spacing	40	40	-	-
L9: Carriage length with housing	232.2	254.6	232.2	254.6
L11: Housing length	163.2	163.2	163.2	163.2
Lw: Inner carriage body length	57	79.4	57	79.4
N: Lateral fixing hole spacing	57	57	35	35
O: Reference face height	7.5	7.5	7.5	7.5
Ts: Front plate thickness	12	12	12	12
Capacities and weights				
C0: Static load capacitiy (N)	49800	70300	49800	70300
C100: Dynamic load capacity (N)	27700	39100	27700	39100
M0Q: Static cross moment capacity (Nm)	733	1035	733	1035
M0L: Static longitud. moment capacity (Nm)	476	936	476	936
MQ: Dyn. cross moment capacity (Nm)	408	576	408	576
ML: Dyn. longitud. moment capacity (Nm)	265	521	265	521
Gew: Carriage weight (kg)	1.4	1.6	1.3	1.4

Note: * Values valid for external housing / front plate

Available options for AMSA 3L W 25

AMSA 3L S 35 Drawings

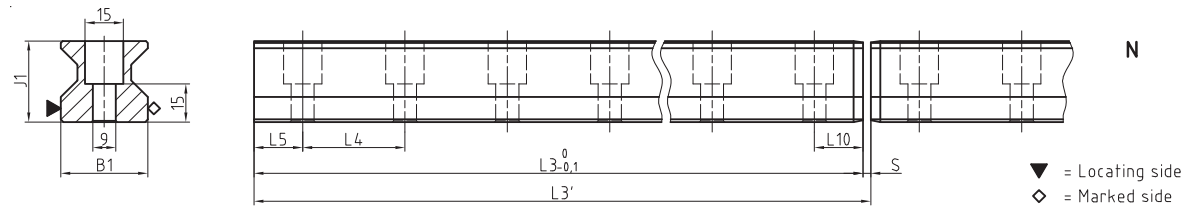

AMSA 3L W 35 Drawings

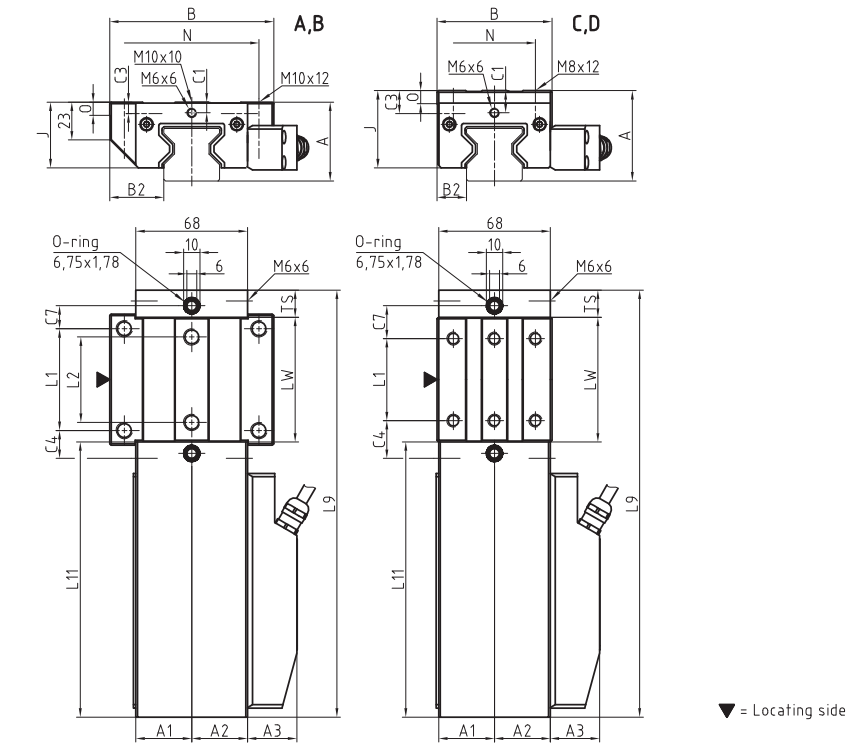

AMSA 3L W 35 Rigidity diagram

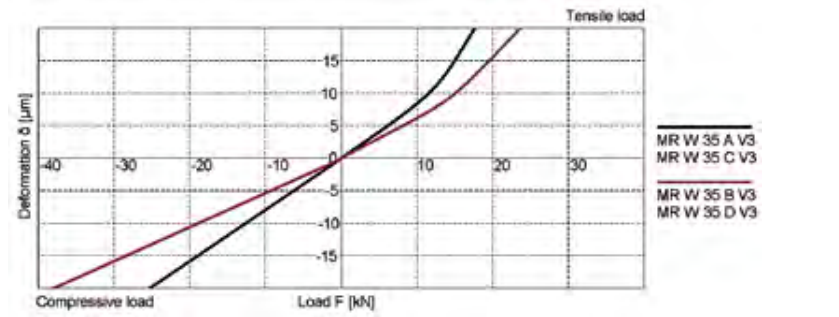

AMSA 3L W 35 Load rating

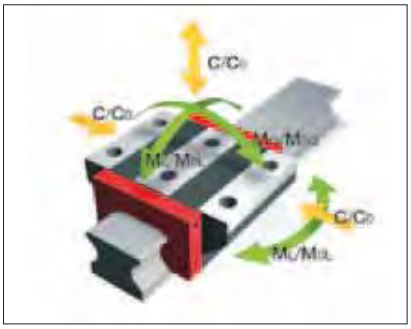

AMSA 3L S 35 Dimensions

	AMSA 3L S 35-N
B1: Rail width	34
J1: Rail height	31.95
L3: Rail length	2 999.5
L3': System length	3 000
S: Gap size	0.5
L4: Spacing of fixing holes	40
L5/L10: Position of first/last fixing hole	19.75
Gew.: Rail weight, specific (kg/m)	6.5

Available options for AMSA 3L S 35

AMSA 3L W 35 Dimensions and capacities

	AMSA 3L W 35-A	AMSA 3L W 35-B	AMSA 3L W 35-C	AMSA 3L W 35-D
A: System height	48	48	55	55
A1: Half width of housing on opposite side	34	34	34	34
A2: Half width of housing on reading head side	34	34	34	34
A3: Projection of reading head	30	30	30	30
B: Carriage width	100	100	70	70
B2: Distance between locating faces	33	33	18	18
C1: Position of center front lube hole*	6.5 / 7	6.5 / 7	13.5 / 14	13.5 / 14
C3: Position of lateral lube hole	7	7	14	14
C4: Position of lateral lube hole	17	30.5	23	25.5
C7: Position of top lube hole	14	27.5	20	22.5
J: Carriage height	40	40	47	47
L1: Exterior fixing hole spacing	62	62	50	72
L2: Interior fixing hole spacing	52	52	-	-
L9: Carriage length with housing	260.2	287.2	260.2	287.2
L11: Housing length	167.7	167.7	167.7	167.7
Lw: Inner carriage body length	76	103	76	103
N: Lateral fixing hole spacing	82	82	50	50
O: Reference face height	8	8	8	8
Ts: Front plate thickness	16.5	16.5	16.5	16.5
Capacities and weights				
C0: Static load capacitiy (N)	93400	128500	93400	128500
C100: Dynamic load capacity (N)	52000	71500	52000	71500
M0Q: Static cross moment capacity (Nm)	2008	2762	2008	2762
M0L: Static longitud. moment capacity (Nm)	1189	2214	1189	2214
MQ: Dyn. cross moment capacity (Nm)	1118	1537	1118	1537
ML: Dyn. longitud. moment capacity (Nm)	662	1232	662	1232
Gew: Carriage weight (kg)	2.5	3.1	2.4	2.9

Note: * Values valid for external housing / front plate

Available options for AMSA 3L W 35

AMSA 3L S 45 Drawings

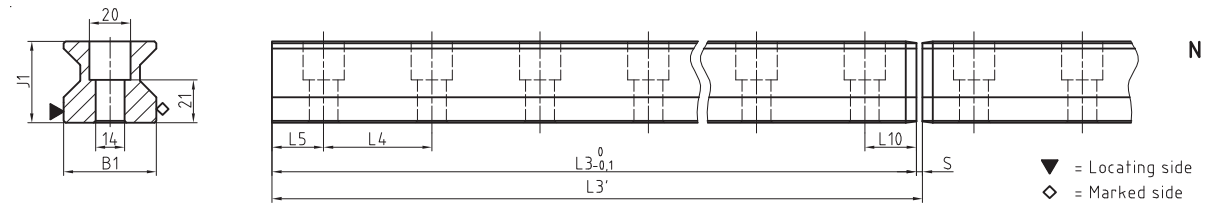

AMSA 3L W 45 Drawings

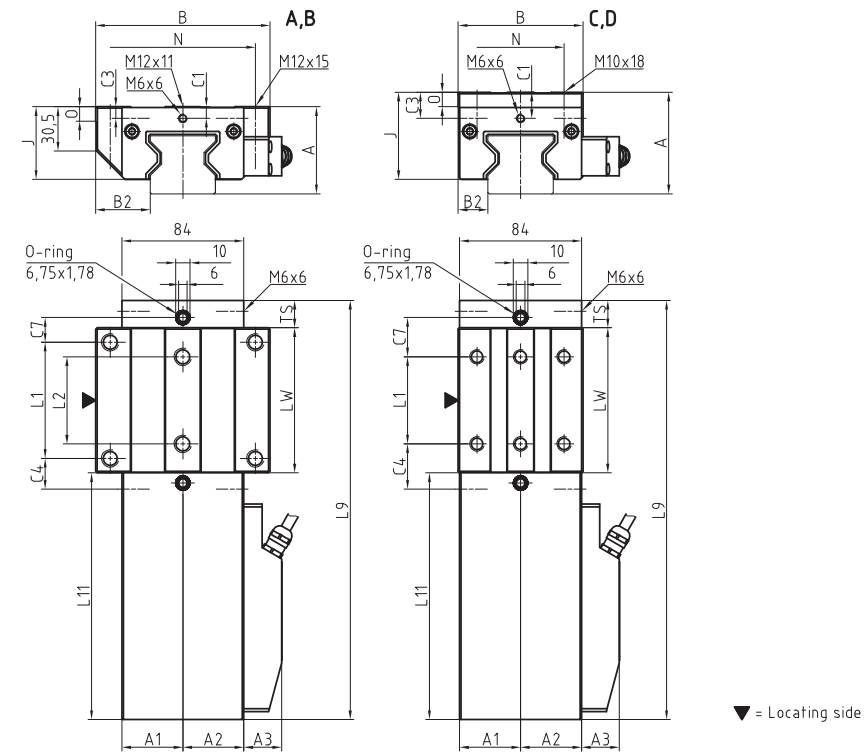

AMSA 3L W 45 Rigidity diagram

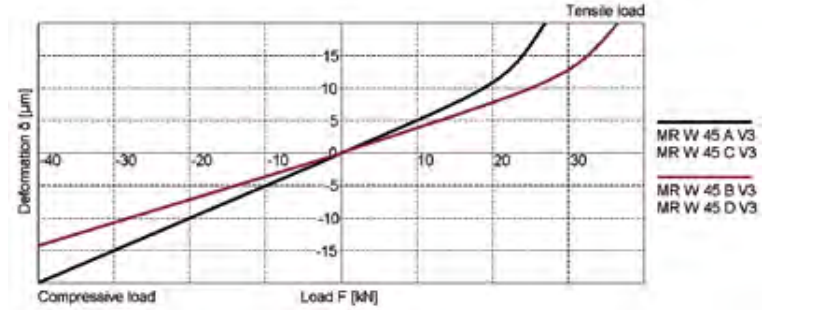

AMSA 3L W 45 Load rating

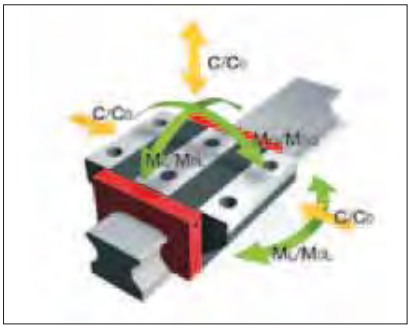

AMSA 3L S 45 Dimensions

	AMSA 3L S 45-N
B1: Rail width	45
J1: Rail height	39.95
L3: Rail length	2992
L3': System length	2992.5
S: Gap size	0.5
L4: Spacing of fixing holes	52.5
L5/L10: Position of first/last fixing hole	26
Gew.: Rail weight, specific (kg/m)	10.8

Available options for AMSA 3L S 45

AMSA 3L W 45 Dimensions and capacities

	AMSA 3L W 45-A	AMSA 3L W 45-B	AMSA 3L W 45-C	AMSA 3L W 45-D
A: System height	60	60	70	70
A1: Half width of housing on opposite side	42	42	42	42
A2: Half width of housing on reading head side	42	42	42	42
A3: Projection of reading head	26	26	26	26
B: Carriage width	120	120	86	86
B2: Distance between locating faces	37.5	37.5	20.5	20.5
C1: Position of center front lube hole	8	8	18	18
C3: Position of lateral lube hole	8	8	18	18
C4: Position of lateral lube hole	21.5	38.75	31.25	38.75
C7: Position of top lube hole	17	34.5	27	34.5
J: Carriage height	50	50	60	60
L1: Exterior fixing hole spacing	80	80	60	80
L2: Interior fixing hole spacing	60	60	-	-
L9: Carriage length with housing	288.7	323.7	288.7	323.7
L11: Housing length	169.9	169.9	169.9	169.9
Lw: Inner carriage body length	100	135	100	135
N: Lateral fixing hole spacing	100	100	60	60
O: Reference face height	10	10	10	10
Ts: Front plate thickness	18.8	18.8	18.8	18.8
Capacities and weights				
C0: Static load capacitiy (N)	167500	229500	167500	229500
C100: Dynamic load capacity (N)	93400	127800	93400	127800
M0Q: Static cross moment capacity (Nm)	4621	6333	4621	6333
M0L: Static longitud. moment capacity (Nm)	2790	5161	2790	5161
MQ: Dyn. cross moment capacity (Nm)	2577	3527	2577	3527
ML: Dyn. longitud. moment capacity (Nm)	1556	2874	1556	2874
Gew: Carriage weight (kg)	4.4	5.5	4.2	5.2

Available options for AMSA 3L W 45

AMSA 3L S 55 Drawings

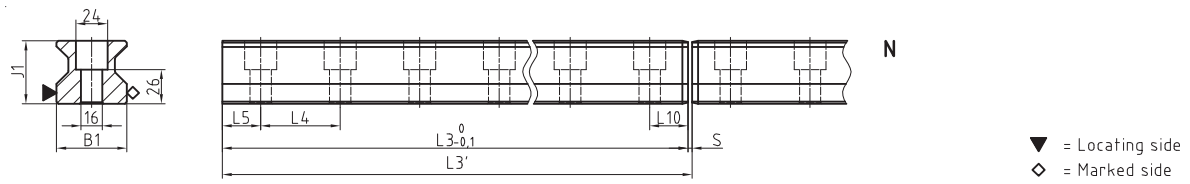

AMSA 3L W 55 Drawings

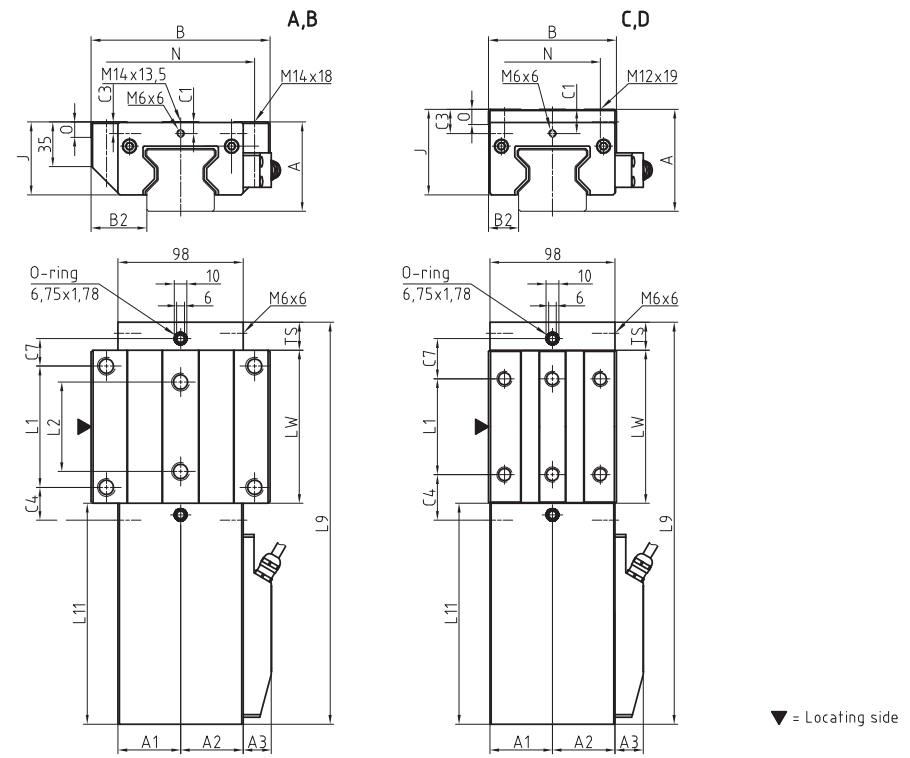

AMSA 3L W 55 Rigidity diagram

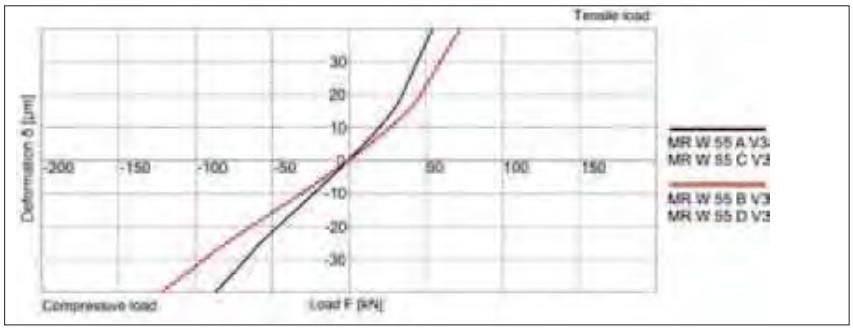

AMSA 3L W 55 Load rating

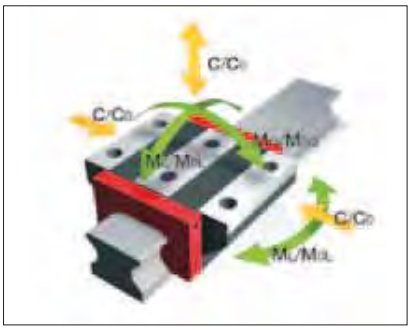

AMSA 3L S 55 Dimensions

	AMSA 3L S 55-N
B1: Rail width	53
J1: Rail height	47.95
L3: Rail length	2999.5
L3': System length	3 000
S: Gap size	0.5
L4: Spacing of fixing holes	60
L5/L10: Position of first/last fixing hole	29.75
Gew.: Rail weight, specific (kg/m)	15.2

Available options for AMSA 3L S 55

AMSA 3L W 55 Dimensions and capacities




	AMSA 3L W 55-A	AMSA 3L W 55-B	AMSA 3L W 55-C	AMSA 3L W 55-D
A: System height	70	70	80	80
A1: Half width of housing on opposite side	49	49	49	49
A2: Half width of housing on reading head side	49	49	49	49
A3: Projection of reading head	22	22	22	22
B: Carriage width	140	140	100	100
B2: Distance between locating faces	43.5	43.5	23.5	23.5
C1: Position of center front lube hole	9	9	19	19
C3: Position of lateral lube hole	9	9	19	19
C4: Position of lateral lube hole	25.75	46.75	35.75	46.75
C7: Position of top lube hole	21.5	42.5	31.5	42.5
J: Carriage height	57	57	67	67
L1: Exterior fixing hole spacing	95	95	75	95
L2: Interior fixing hole spacing	70	70	-	-
L9: Carriage length with housing	314.7	356.7	314.7	356.7
L11: Housing length	172.9	172.9	172.9	172.9
Lw: Inner carriage body length	120	162	120	162
N: Lateral fixing hole spacing	116	116	75	75
O: Reference face height	12	12	12	12
Ts: Front plate thickness	21.8	21.8	21.8	21.8
Capacities and weights				
C0: Static load capacitiy (N)	237000	324000	237000	324000
C100: Dynamic load capacity (N)	131900	180500	131900	180500
M0Q: Static cross moment capacity (Nm)	7771	10624	7771	10624
M0L: Static longitud. moment capacity (Nm)	4738	8745	4738	8745
MQ: Dyn. cross moment capacity (Nm)	4325	5919	4325	5919
ML: Dyn. longitud. moment capacity (Nm)	2637	4872	2637	4872
Gew: Carriage weight (kg)	6.4	8.2	5.9	7.5

Available options for AMSA 3L W 55

AMSA 3L S 65 Drawings

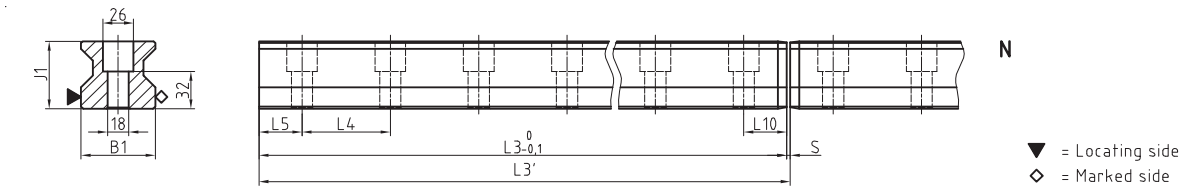

AMSA 3L W 65 Drawings

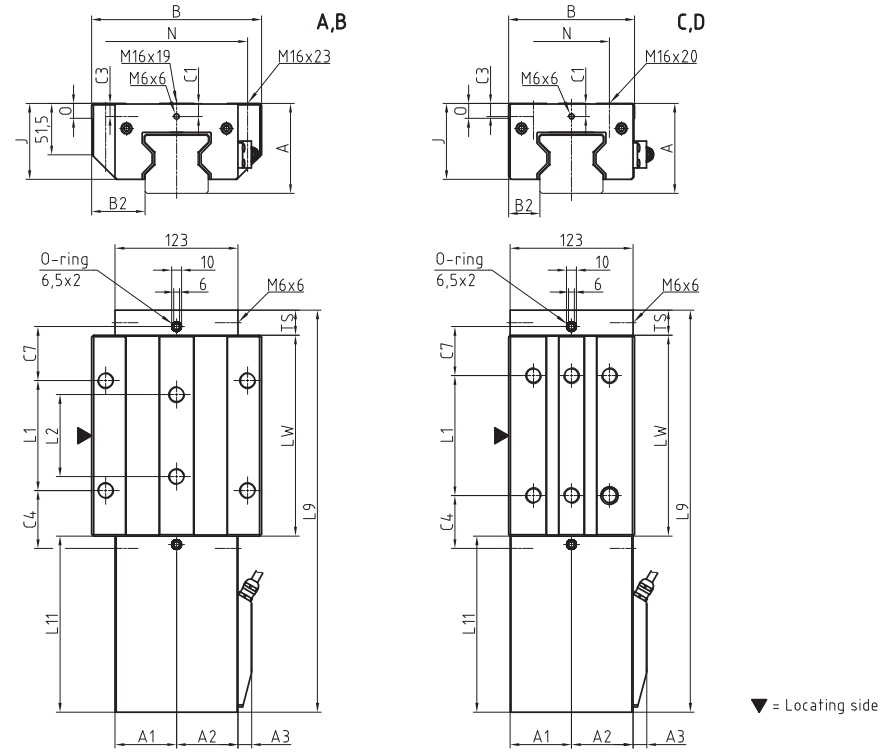

AMSA 3L W 65 Rigidity diagram

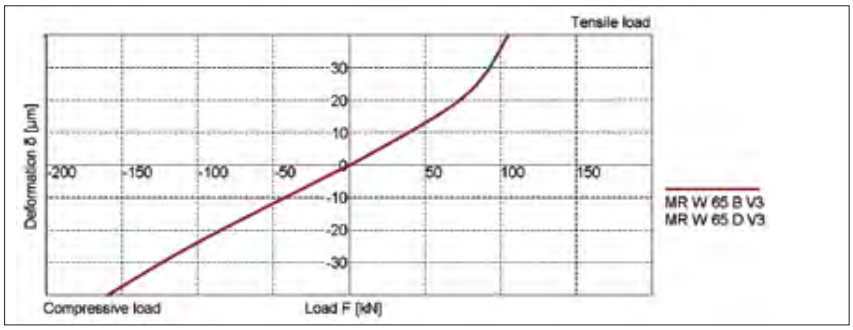

AMSA 3L W 65 Load rating

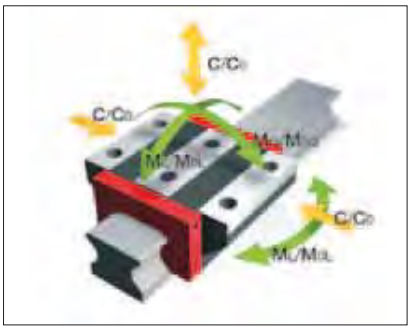

AMSA 3L S 65 Dimensions

	AMSA 3L S 65-N
B1: Rail width	63
J1: Rail height	57.95
L3: Rail length	2999.5
L3': System length	3 000
S: Gap size	0.5
L4: Spacing of fixing holes	75
L5/L10: Position of first/last fixing hole	37.25
Gew.: Rail weight, specific (kg/m)	22.8

Available options for AMSA 3L S 65

AMSA 3L W 65 Dimensions and capacities




	AMSA 3L W 65-A	AMSA 3L W 65-B	AMSA 3L W 65-C	AMSA 3L W 65-D
A: System height	90	90	90	90
A1: Half width of housing on opposite side	61.5	61.5	61.5	61.5
A2: Half width of housing on reading head side	61.5	61.5	61.5	61.5
A3: Projection of reading head	13.5	13.5	13.5	13.5
B: Carriage width	170	170	126	126
B2: Distance between locating faces	53.5	53.5	31.5	31.5
C1: Position of center front lube hole	13	13	13	13
C3: Position of lateral lube hole	13	13	13	13
C4: Position of lateral lube hole	31.75	58	51.75	53
C7: Position of top lube hole	27.75	54	47.75	49
J: Carriage height	76	76	76	76
L1: Exterior fixing hole spacing	110	110	70	120
L2: Interior fixing hole spacing	82	82	-	-
L9: Carriage length with housing	349.7	402.2	349.7	402.2
L11: Housing length	176.2	176.2	176.2	176.2
Lw: Inner carriage body length	148.5	201	148.5	201
N: Lateral fixing hole spacing	142	142	76	76
O: Reference face height	15	15	15	15
Ts: Front plate thickness	25	25	25	25
Capacities and weights				
C0: Static load capacitiy (N)	419000	530000	419000	530000
C100: Dynamic load capacity (N)	232000	295000	232000	295000
M0Q: Static cross moment capacity (Nm)	16 446	20912	16446	20912
M0L: Static longitud. moment capacity (Nm)	10754	17930	10754	17930
MQ: Dyn. cross moment capacity (Nm)	9154	11640	9154	11640
ML: Dyn. longitud. moment capacity (Nm)	5954	9980	5954	9980
Gew: Carriage weight (kg)	12.6	15.9	10.3	12.8

Available options for AMSA 3L W 65

AMSA 3L Rails accessories overview

Accessories	AMSA 3L S 25	AMSA 3L S 35	AMSA 3L S 45	AMSA 3L S 55	AMSA 3L S 65
Plugs:					
Plastic plugs	MRK 25	MRK 35	MRK 45	MRK 55	MRK 65
Brass plugs	MRS 25	MRS 35	MRS 45	MRS 55	MRS 65
Steel plugs	MRZ 25	MRZ 35	MRZ 45	MRZ 55	MRZ 65
Assembly tools:					
Assembly tool for AMSA 3L	MWM 3L 25	MWM 3L 35	MWM 3L 45	MWM 3L 55	MWM 3L 65
Installation tool for steel plugs	MWH 25	MWH 35	MWH 45	MWH 55	MWH 65
Hydraulic cylinder for MWH	MZH	MZH	MZH	MZH	MZH
End pieces:					
End piece for AMSA 3L rails	EST 3L 25	EST 3L 35	EST 3L 45	EST 3L 55	EST 3L 65

AMSA 3L Carriages accessories overview

Accessories	AMSA 3L W 25	AMSA 3L W 35	AMSA 3L W 45	AMSA 3L W 55	AMSA 3L W 65
Additional wipers:					
Additional wipers NBR	ZCN 25	ZCN 35	ZCN 45	ZCN 55	ZCN 65
Additional wipers Viton	ZCV 25	ZCV 35	ZCV 45	ZCV 55	ZCV 65
Metal wiper	ASM 25-A	ASM 35-A	ASM 35-A	ASM 55-A	ASM 65-A
Bellows:					
Bellows	FBM 25	FBM 35	FBM 45	FBM 55	FBM 65
Adapter plate for bellows (spare part)	ZPL 25	ZPL 35	ZPL 45	ZPL 55	ZPL 65
End plate for bellows (spare part)	EPL 25	EPL 35	EPL 45	EPL 55	EPL 65
Assembly rails:					
Assembly rail	MRM 3L 25	MRM 3L 35	MRM 3L 45	MRM 3L 55	MRM 3L 65
Lubrication plates:					
Lubrication plate	SPL 25-MR	SPL 35-MR	SPL 45-MR	SPL 55-MR	SPL 65-MR
Front plates:					
Front plate (spare part)	STP 25-EK	STP 35-EK	STP 45-EK	STP 55-EK	STP 65-EK
Lube nippels:					
Hydraulic-type grease nipple straight	SN 6	SN 6	SN 6	SN 6	SN 6
Hydraulic-type grease nipple 45°	SN 6-45	SN 6-45	SN 6-45	SN 6-45	SN 6-45
Hydraulic-type grease nipple 90°	SN 6-90	SN 6-90	SN 6-90	SN 6-90	SN 6-90
Flush type grease nipple M3	SN 3-T	-	-	-	-
Flush type grease nipple M6	SN 6-T	SN 6-T	SN 6-T	SN 6-T	SN 6-T
Grease gun for SN 3-T und SN 6-T	SFP-T3	SFP-T3	SFP-T3	SFP-T3	SFP-T3
Lube adapters:					
Straight screw-in connection M3	SA 3-D3	-	-	-	-
Lubrication adapter M8 round-head	SA 6-RD-M8	SA 6-RD-M8	SA 6-RD-M8	SA 6-RD-M8	SA 6-RD-M8
Lubrication adapter M8 hexagon head	-	SA 6-6KT-M8	SA 6-6KT-M8	SA 6-6KT-M8	SA 6-6KT-M8
Lubrication adapter G1/8 hexagon head	-	SA 6-6KT-G1/8	SA 6-6KT-G1/8	SA 6-6KT-G1/8	SA 6-6KT-G1/8
Swivel screw connection for pipe d=4 mm	SV 6-D4	SV 6-D4	SV 6-D4	SV 6-D4	SV 6-D4
Swivel screw connection M6	SV 6-M6	SV 6-M6	SV 6-M6	SV 6-M6	SV 6-M6
Swivel screw connection M6 long	SV 6-M6-L	SV 6-M6-L	SV 6-M6-L	SV 6-M6-L	SV 6-M6-L
Swivel screw connection M8	SV 6-M8	SV 6-M8	SV 6-M8	SV 6-M8	SV 6-M8
Swivel screw connection M8 long	SV 6-M8-L	SV 6-M8-L	SV 6-M8-L	SV 6-M8-L	SV 6-M8-L

AMSA 3L Rails accessory details

Assembly tools
The MWM3L assembly tool is intended for the phase-locked assembly of the AMSA 3L rails. It consists of a size-dependent guide carriage, two mounting housings and two reading heads for registering the phase. Furthermore, the MWM assembly tool contains the display software for calibrating measurements and the assembly and start-up instructions.

Order code: **MWM 3L xx**
xx = size, ordering example: 1 x MWM 3L 55

End pieces
The AMSA 3L concept allows the rails to be separated according to the desires of the customer for the first and last rail segments of a set of rails.
After separation, the EST 3L end pieces prevent the masking tape on the measuring element from detaching. The end pieces may be used on both sides, and are attached using a central screw in the front drill holes.

Order code: **EST 3L xx**
xx = size, ordering example: 1 x EST 3L 55

11.4 Order key

Individual guide rails and carriages are ordered in accordance with the order codes described below.
AMSA 3L carriages consist of guide carriage, casing and reading head.
All MONORAIL MR carriages can also be used with AMSA 3L rails.
Q.v. chapter 2 and chapter 3.3 for the order key for accessories.
Separate order codes are used in each case for rails, carriages and accessories. This also applies to different versions of rails and carriages.
All guide components are supplied individually as standard, i.e. unassembled.
If required, SCHNEEBERGER can also supply rails and carriages assembled incl. accessories as complete systems. Please note the ordering instructions in chapter 2.4 if this applies.

Order code for AMSA 3L Rails

	1x	AMSA 3L S	35	-N	-G1	-KC	-R11	-3000	-CN
Quantity									
Rail									
Size									
Type									
Accuracy									
Straightness									
Reference side									
Rail length L3									
Coating									

NB
Q.v. chapter 11.1 to 11.3 for an overview of types, details of shapes, available options and accessories.
Q.v. chapter 2 for a description of the options.
If possible, standard lengths are preferred for L3 rail length.
These are calculated with the table values in chapter 11.2 using the following formula: $L3 = n \times L4 + L5 + L10 \leqslant L3max$.

Order code for AMSA 3L Carriages

	1x	AMSA 3L W	35	-B	-P1	-G1	-V3	-R2	-CN	-S12	-LN	-TSU
Quantity												
Carriage												
Size												
Type												
Reading head position												
Accuracy												
Preload												
Reference side												
Coating												
Lube connection												
Lubrication as delivered condition												
Interface												

NB
Q.v. chapter 11.1 to 11.3 for an overview of types, details of shapes, available options and accessories.
Q.v. chapter 2 for a description of the options.
For detailed information about current configuration options for the interfaces, please visit our website at www.schneeberger.com

SCHNEEBERGER AGENCIES

EUROPE

AUSTRIA
Haberkorn GmbH
6961 Wolfurt
Phone: +43 5574 695-0
Fax: +43 5574 695-99
info.wolfurt@haberkorn.com

BULGARIA / MACEDONIA
Atlas Technik EOOD
Hippodroma, Bl. 139B, Eing. A, App. 6
1612 Sofia, PB 51
Bulgarien
Phone +359 2 859 76 81
Fax +359 2 859 76 81
Mobil +359 8 852 32 595
E-Mail: al_popoff@techno-link.com

CROATIA
Haberkorn CRO d.o.o.
10431 Sveta Nedelja
Phone +385 1 333 5870
Fax. +385 1 337 3902
E-Mail: info@haberkorn.hr

DENMARK
HERSTAD + PIPER A/S
Jernholmen 48c
2650 Hvidovre
Phone +45 367 740 00
Fax +45 367 777 40
E-Mail: mail@herstad-piper.dk

FINLAND
EIE Maskin OY
PL, 80 Asematie 1
10601 Tammisaari
Phone +358 192 239 100
Fax +358 192 239 199
E-Mail: info@eie.fi

FRANCE
Region Rhône-Alpes
Groupe BARET
6 avenue du 11 novembre 1918
69200 Venissieux
Phone +33 4 78 77 32 32
Fax +33 4 78 00 90 00
E-Mail: contact@baret.fr

Regions Ile de France, Normandie, Bretagne
Groupe LECHEVALIER
56 rue Jean Mermoz
Parc d'activités de la Bretèque
76230 Bois-Guillaume Cedex
Phone +33 2 35 12 65 65
Fax +33 2 35 59 89 97
E-Mail: contact@lechevalier-sa.com

Region Nord Pas de Calais
LEFRANC LTL «Le Panetier»
35, rue Pierre Martin
Parc d'Activités de l'Inquétrie
62280 Saint Martin Boulogne
Phone +33 3 21 99 51 51
Fax +33 3 21 99 51 50
E-Mail: lefranc.boulogne@lefranc-sa.fr

GERMANY
BGP-Blazevic Geradlinige Präzisionstechnik
Stipo Blazevic
Hochstiftstrasse 31
93055 Regensburg
Phone +49 941 569 996 20
Fax +49 941 569 950 97
Mobil +49 151 401 126 25
E-Mail: info@bgp-blazevic.de

GREAT BRITAIN
LG Motion Ltd.
Unit 1 Telford Road
Houndmills Estate, Basingstoke
Hampshire RG21 6YU
Phone +44 012 563 656 00
Fax +44 012 563 656 45
E-Mail: info@lg-motion.co.uk

EUROPE

HUNGARY
Haberkorn Kft.
Asztalos Sándor u.12
Budapest, 1087
Phone +36 13030325
Fax +36 1/3030262
E-Mail: office@haberkorn.rs

ITALY
Nadella S.r.l.
Via Melette, 16
20128 Milano
Phone +39 022 709 329 7
Fax +39 022 551 768
E-Mail: customer.service@nadella.it

NORWAY
Elmeko AS (s. EIE Maskin)
Tvetenveien 164
0671 Oslo
Phone +47 675 722 70
Fax +47 675 722 80
E-Mail: elmeko@elmeko.no

POLAND
TECHNIKA LINIOWA
Rollico Rolling Components
Ul. Cegielniana 21
42-700 Lubliniec
Phone +48 343 510 430
Fax +48 343 510 431
E-Mail: rollico@rollico.com

ROMANIA
Meximpex SRL
4, Burebista Blvd.,
bl. D13 sc. A et 2 ap. 9-10
031108 Bucharest
Phone +40 213 166 843 /44
Fax +40 213 166 846
E-Mail: office@meximpex.ro

SERBIA/MONTENEGRO
Haberkorn d.o.o.
Kralja Petra I, 59
21203 Veternik,
Phone +381 21 3 101 555
Fax +381 21 3 101 554
E-Mail: office@haberkorn.rs

SLOVAKIA
KBM, s.r.o.
Juraj Hajovsky
Zitná 13
010 04 Zilina
Phone +421 417 070 324
Fax +421 417 070 333
Mobile +421 090 585 1465
E-Mail: jhajovsky@kbm.sk

SLOVENIA / BOSNIA HERZEGOVINA
Haberkorn d.o.o.
Vodovodna ul. 7
2000 Maribor
Phone +386 2 320 67 10
Fax +386 2 320 67 30
E-Mail: info@haberkorn.si

SWEDEN
EIE Maskin AB
Box 7
12421 Bandhagen
Phone +46 87 278 800
Fax +46 87 278 899
E-Mail: eie@eie.se

TURKEY
Birlik Rulman (Paz.ltd.sti.)
Mumhane Cad. No: 16
80030 Karakoy-Istanbul
Phone +90 212 249 54 95
Fax +90 212 244 21 40
E-Mail: birlik@birlikrulman.com

ASIA

KOREA
Intech Automation Inc.
1-1108, Ace Hitech City
55-20 Mullae-Dong 3-Ga
Youngdeungpo-Ku
150-972 Seoul
Phone +82 2 3439 0070 - 4
Fax +82 2 3439 0080
E-Mail: intech@intechautomation.co.kr

Lineartech Inc.
369 Geumgok-ri, Dongtan-myeon
Hwaseong-si, Gyeonggi-do
445-811 Korea
Phone +82 31 274 0485
Fax +82 31 274 0486
E-Mail: lineartech@chol.com

TAIWAN / REPUBLIC OF CHINA
Ever Bright Precisiton Ltd.
1 F,nr.52
Lane 10 Chi-hu Road
114 Taipei
Phone +886 226 595 586
Fax +886 226 595 587
E-Mail: sales@everbright.com.tw

AUSTRALIA / NEW ZEALAND

RJM Engineering Supplies
Tamar Street 13
VIC 3134 Ringwood
Phone +61 398 794 881
Fax +61 398 793 700
E-Mail: rjmeng@rjmeng.com.au

SOUTH AFRICA

Fischli & Fuhrmann Ltd.
P.O Box 253
1600 Isando Gauteng
Phone +27 119 745 571
Fax +27 119 745 574
E-Mail: info@fifu.co.za

SOUTH AMERICA

Ibatech Tecnologia Ltda.
Av. Amazonas, 976
90240 542 Porto Alegre RS
Brazil
Phone +55 513 337 14 81
Fax +55 513 337 52 65
E-Mail: ibacorp@iba-corp.com

SCHNEEBERGER®

PROSPECTUSES

- COMPANY BROCHURE
- CUSTOMIZED BEARINGS
- GEAR RACKS
- LINEAR BEARINGS and RECIRCULATING UNITS
- MINERAL CASTING SCHNEEBERGER
- MINI-X MINIRAIL / MINISCALE PLUS / MINISLIDE
- MONORAIL and AMS profiled linear guideways with integrated measuring system
- MONORAIL and AMS application catalog
- POSITIONING SYSTEMS
- SLIDES

SCHNEEBERGER COMPANIES

SWITZERLAND
SCHNEEBERGER AG
St. Urbanstrasse 12
4914 Roggwil/BE

Phone +41 62 918 41 11
Fax +41 62 918 41 00

E-Mail:
info-ch@schneeberger.com

GERMANY
SCHNEEBERGER GmbH
Gräfenau
75339 Höfen/Enz

Phone +49 7081 782 0
Fax +49 7081 782 124

E-Mail:
info-d@schneeberger.com

ITALY
SCHNEEBERGER S.r.l.
Via Soldani 10
21021 Angera (VA)

Phone +39 0331 93 2010
Fax +39 0331 93 1655

E-Mail:
info-i@schneeberger.com

USA
SCHNEEBERGER Inc.
44 Sixth Road,
Woburn, MA 01801-1759

Phone +1 781 271 0140
Fax +1 781 275 4749

E-Mail:
info-usa@schneeberger.com

INDIA
SCHNEEBERGER India Pvt. Ltd.
406, 4th Floor, Satra Plaza,
Palm Beach Road, Sector 19D Vashi,
400 703 New Mumbai

Phone +91 22 6461 0646
+91 22 6461 1756

E-Mail:
info-in@schneeberger.com

JAPAN
Nippon SCHNEEBERGER K.K.
Crane Toranomon Bldg 7F
3-20-5 Toranomon, Minato-ku
Tokyo 105-0001

Phone +81 3 6435 7474
Fax +81 3 6435 7475

E-Mail:
info-j@schneeberger.com

CHINA
SCHNEEBERGER (Shanghai) Co., Ltd.
Rm 606, Shang Gao International Building
No. 137 XianXia Road
200051 Shanghai

Phone +86 21 6209 0037 / 27
Fax +86 21 6209 0102

E-Mail:
info-cn@schneeberger.com

KOREA
SCHNEEBERGER Korea Ltd.
UNION Center Building
1004, 10th FL
310, Gangnam-Daero,
Gangnam-Gu, Seoul,
Korea 135-754

Phone +82 2 554 2971
Fax +82 2 554 3971

E-Mail:
info-kr@schneeberger.com

SINGAPORE
SCHNEEBERGER LINEAR
TECHNOLOGY PTE. Ltd.
160 Paya Lebar Road, #05-04
Orion Industrial Building
409022 Singapore

Phone + 65 6841 2385
Fax + 65 6841 3408

E-Mail:
info-sg@schneeberger.com

JAPAN
日本シュネーベルガー株式会社
〒105-0001
東京都港区虎ノ門3-20-5
クレイン虎ノ門ビル7F

電話 03 6435 7474
ファクス 03 6435 7475

Eメール:
info-j@schneeberger.com

CHINA
施耐博格（上海）传动技术有限公司
上海市长宁区
仙霞路137号盛高国
际大厦606室，上海 200051

电话 +86 21 6209 0027
传真 +86 21 6209 0102

邮箱:
info-cn@schneeberger.com

KOREA
서울시 강남구 강남대로 310
유니온센터 빌딩 1004호
우편번호 135-754

전화 +82 2 554 2971
팩스 +82 2 554 3971

이메일:
info-kr@schneeberger.com

SCHNEEBERGER MINERAL CASTING

CZECH REPUBLIC
SCHNEEBERGER
Mineralgusstechnik s.r.o
Prumyslový park 32/20
350 02 Cheb – Dolní Dvory

Phone +420 354 400 941
Fax +420 354 400 940

E-Mail:
info-mineralguss@schneeberger.com

CHINA
SCHNEEBERGER Changzhou
Precision Systems Co. Ltd.
137 Hanjiang Road
Changzhou New district
213000 Changzhou, Jiangsu

Phone +86 519 8988 3938
Fax +86 519 8988 5115

E-Mail:
info-mineralcasting@schneeberger.com

CHINA
施耐博格（常州）测试系统有限公司
汉江路137，常州新区，常州213022

电话 +86 519 8988 3938
传真 +86 519 8988 5115

邮箱:
info-mineralcasting@schneeberger.com

SCHNEEBERGER SALES DEPARTMENTS

AUSTRIA AND SOUTH EAST EUROPE
Mobile +43 676 935 1035

E-Mail:
info-a@schneeberger.com

BENELUX
Mobile +31 6 5326 3929

E-Mail:
info-nl@schneeberger.com

DENMARK, SWEDEN
Mobile +31 6 5326 3929

E-Mail:
info-nl@schneeberger.com

FRANCE
Mobile +33 6 0941 6269

E-Mail:
info-f@schneeberger.com

GREAT BRITAIN
Mobile +44 77 8814 5645

E-Mail:
info-uk@schneeberger.com

ISRAEL
Mobile +972 5 0551 7920

E-Mail:
info-il@schneeberger.com

POLAND, SLOVAKIA, CZECH REPUBLIC
Mobile +420 6 0278 4077

E-Mail:
info-cz@schneeberger.com

RUSSIA, BELARUS, UKRAINE
Mobile +7 985 960 85 53
Mobile +38 050 407 6789
Mobile +37 529 860 0410

E-Mail:
info-ru@schneeberger.com

SPAIN, PORTUGAL ANDORRA
Mobile +34 69 559 05 99

E-Mail:
info-es@schneeberger.com

TURKEY
Mobile + 90 545 320 83 55

E-Mail:
info-tr@schneeberger.com

www.schneeberger.com

20.2191/03/0115/e/SRO/Printed in India. Subject to technical changes.